WGC COMMERCIAL

GREENHOUSES • DESIGN • BUILD • SERVICE



GABLE 7500 SERIES

ASH - MAPLE - OAK

GENERAL INSTRUCTION MANUAL

Gallina USA

J&D Manufacturing

PLYCO

CONLEY'S GREENHOUSE MANUFACTURING & SALES

- Greenhouse Frames by WGC/Conley's Manufacturing - Glazing by Gallina USA - Doors by Plyco Corp - Equipment by J&D Manufacturing - Distributed by Wisconsin Greenhouse Company (Equipment Subject to change)

CRAFTING PREMIER GREENHOUSES

Superior Design, Quality Materials, and Midwest Craftsmanship

About Us

We are a greenhouse building group based in South Central Wisconsin. For over 30 years, we have specialized in end-to-end greenhouse construction, guiding our clients through design, material quoting, and complete system installation. By collaborating with top-tier suppliers, we assemble custom, high-performance greenhouse systems tailored to your operational needs. Key components and preferred vendors include:

Galvanized Steel Framing – Conley's Manufacturing

Our galvanized steel greenhouse frames are sourced directly from Conley's Manufacturing, who we view as the industry standard for strength and durability. Key advantages include:

- **Roll-Form Steel Construction:** Offers an exceptional strength-to-weight ratio while cost-effectively integrating built-in condensation channels that outperform square tubing.
- **Bolt-Ready Assembly:** Pre-punched components minimize the need for expensive field welding or tek screw assembly.
- **Corrosion Resistance:** Heavy-duty galvanized coating protects against premature corrosion in high-humidity environments.

Polycarbonate Glazing – Gallina USA

We partner with Gallina USA out of Janesville, Wisconsin for our polycarbonate glazing. Designed to endure the extreme seasonal temperature swings of the Midwest, Gallina's protective coatings consistently show minimal yellowing & the best material lifespans compared to alternative market options from around the world.

Regional Equipment & Environmental Controls

Wherever possible, we prioritize sourcing secondary systems locally from trusted Midwest partners, alongside leading specialized control manufacturers:

- **Doors:** Plyco (Elkhart Lake, WI)
- **Heating Systems:** Modine Heaters (Racine, WI)
- **Ventilation & Circulation Fans:** J&D Manufacturing (Eau Claire, WI)
- **Environmental Controls:** Wadsworth Controls (Colorado) & Bartlett Instruments (Iowa)

While we advocate for these trusted solutions, we are happy to source alternative vendor materials upon request. By combining these industry-leading components it allows us to deliver the best results for our clients.

Our mission is to deliver the highest quality, most cost-effective greenhouse tailored to your exact specifications. The following pages introduce some of the installation methods we can use (though job-specific instructions are determined on a case-by-case basis).

- WGC Commercial Greenhouse Team

TABLE OF CONTENTS

INTRODUCTION ---------- Page 1

DISCLAIMER ---------- Page 1

NOTICE TO WGC/CONLEY'S CUSTOMERS
PROTECT YOURSELF FROM ADDED COSTS---------- Page 1 - 2

WARRANTY ---------- Page 2

GRADE AND PREPARE THE BUILDING SITE ---------- Page 3

LAYOUT AND SQUARE THE FOUNDATION ---------- Page 3 - 5

FIND COLUMN CENTERS ---------- Page 5

AUGER COLUMN HOLES ---------- Page 6

OFFSETTING THE LINES ---------- Page 6

SLOPE LINES ---------- Page 7

MARK CENTERS ON COLUMN ---------- Page 7

MARK COLUMNS ---------- Page 8

SET COLUMNS ---------- Page 8

ASSEMBLING WEBBED TRUSS---------- Page 9 - 10

END WALL TRUSS ASSEMBLY ---------- Page 11

WEBBED TRUSS SECTION ---------- Page 12

END WALL TRUSS SECTION ---------- Page 12

INSTALLATION OF TRUSSED AND PURLINS ---------- Page 13 - 15

GUTTER INSTALLATION ---------- Page 16 - 17

END WALL UPRIGHT INSTALLATION ---------- Page 18 - 19

END BAY CABLE INSTALLATION ---------- Page 20 - 22

STRINGER CABLE INSTALLATION---------- Page 23

KNEE BRACE INSTALLATION ---------- Page 24

INTRODUCTION

SHOULD YOU HAVE ANY QUESTIONS CONCERNING THESE INSTRUCTIONS, COMPONENTS, ETC., PLEASE CONTACT US DIRECTLY. WE WELL BE GLAD TO ANSWER ANY QUESTIONS CONCERNING OUR MANUFACTURED PRODUCT.

INCLUDED IN THIS PACKAGE ARE INSTRUCTIONS AND DETAILED DRAWINGS PERTAINING TO YOUR WGC/ CONLEY'S GREENHOUSE SYSTEM. STUDY THE INSTRUCTIONS BEFORE BEGINNING CONSTRUCTION TO BECOME FAMILIAR WITH OUR PRODUCT AND HOW IT IS ASSEMBLED.

STORE ALL MATERIALS OFF THE GROUND ON WOOD BLOCKS. PROTECT ALL YOUR MATERIALS FROM THEFT AND/OR DAMAGE. YOU MAY WISH TO DISCUSS BUILDER'S RISK INSURANCE WITH YOUR INSURANCE AGENT.

DISCLAIMER

THE FOLLOWING INSTRUCTIONS ARE GIVEN AS SUGGESTED GUIDELINES FOR GENERAL INSTRUCTIONS. WGC/CONLEY'S MANUFACTURING AND SALES OR ANY OF THEIR EMPLOYEES SHALL NOT BE RESPONSIBLE RESULTING FROM PURCHASER'S IMPLEMENTATION OF THESE INSTRUCTIONS. PURCHASERS ALONE SHALL BE RESPONSIBLE FOR CONFORMANCE WITH ALL APPLICABLE LAWS, ORDINANCES, AND SAFETY STANDARDS IN CONSTRUCTING THIS GREENHOUSE AND ALL EQUIPMENT INSTALLED THEREIN.

NOTICE TO WGC/CONLEY'S CUSTOMERS PROTECT YOURSELF FROM ADDED COSTS

ALL PRODUCTS ARE SOLD F.O.B. SHIPPING POINT, AND THE ATTACHED MEMORANDUM COPY OF BILL OF LADING THAT INDICATES THAT MATERIAL SHIPPED HAS NOW, BY LAW, BECOME YOUR PROPERTY AND IS AN ACKNOWLEDGMENT BY THE TRANSPORTATION COMPANY OF THE RECEIPT OF THE MATERIALS IN GOOD CONDITION.

SAFE DELIVERY OF THIS SHIPMENT IS NOW THE RESPONSIBILITY OF THE CARRIER WHO ACTS AS YOUR AGENT. WE WILL BE GLAD TO RENDER ASSISTANCE TO TRACE AND RECOVER LOST GOODS.

EXAMINE THE SHIPMENT CAREFULLY BEFORE SIGNING THE FREIGHT BILL. IF ANY DAMAGE IS NOTED, OR IF THE NUMBER OF PIECES DOES NOT AGREE WITH THE BILL OF LADING, INSIST THAT SHORTAGE OR DAMAGE BE NOTED ON THE FREIGHT BILL BY THE CARRIER'S AGENT. FAILURE TO DO SO MAY JEOPARDIZE YOUR RECOVERY.

DO NOT REFUSE SHIPMENT AS THIS IS YOUR PROPERTY AND REFUSAL CAUSES UNNECESSARY DELAYS AND SHORTAGE EXPENSES. ARRANGE WITH CARRIER WITHIN 15 DAYS TO INSPECT AND MAKE REFERENCE THERETO ON THE FREIGHT BILL. CONSULT YOUR CARRIER FOR DISPOSITION OF DAMAGED ARTICLES.

MAKE YOUR CLAIM PROMPTLY, THE TRANSPORTATION COMPANY WILL NOT CONSIDER A CLAIM UNLESS IT IS PRESENTED WITHIN NINE (9) MONTHS FROM THE DATE OF SHIPMENT. CARRIER'S AGENT WILL ASSIST YOU IN PREPARING A CLAIM.

CLAIMS FOR LOSS OR DAMAGE AND TRANSPORTATION CHARGES RESULTING FROM SHIPPING, MUST NOT BE DEDUCTED FROM THE INVOICE, NOR PATENT INVOICES WITHHELD AWAITING ADJUSTMENT OF SUCH CLAIMS, SINCE IT IS THE FUNCTION OF THE CARRIER TO GUARANTEE SAFE DELIVERY.

CHECK THE ITEMS RECEIVED WITH THE INVOICE. OF THERE IS ANY DISCREPANCY CONTACT US IMMEDIATELY GIVING FULL PARTICULARS. CLAIMS FOR SHORTAGE ATTRIBUTED TO OUR COUNT IN PACKAGE MUST BE MADE WITHIN 10 DAYS FROM THE SHIPMENT IS RECEIVED.

NO MERCHANDISE MAY BE RETURNED FOR CREDIT WITHOUT A RETURN GOODS TAG AND SHIPPING INSTRUCTIONS FROM THE FACTORY.

WARRANTY

WGC/CONLEY'S MANUFACTURING AND SALES, THEIR EMPLOYEES OR REPRESENTATIVES, WILL NOT BE RESPONSIBLE FOR ANY DAMAGES TO GREENHOUSE COVERINGS, STRUCTURES, CROPS OR EQUIPMENT WHEN USED IN CONDUCTION WITH OUR TUBE - LOCK, OR ANY OTHER LOCKING DEVICE MANUFACTURED BY WGC/CONLEY'S MANUFACTURING AND SALES OR OTHERS.

GRADE AND PREPARE THE BUILDING SITE

1. REMOVE THE GRASS AND DEBRIS DOWN TO SOLID SOIL.

2. LOCATE THE BUILDING CORNERS AND SET THE GRADING STAKES 5' BEYOND THE CORNERS.

3. A TRANSIT LEVEL IS NEEDED TO SURVEY THE AREA OF THE BUILDING. IN ORDER TO INSURE PROPER DRAINAGE AND EVEN HEATING, THE WIDTH SHOULD BE SET LEVEL AND THE LENGTH SHOULD BE SET LEVEL WITHIN APPROXIMATELY 1%. WITH A LEVEL GRADE, THE COLUMNS WILL NEED TO BE SET AT DIFFERENT HEIGHTS TO ACHIEVE A SLOPE FOR THE GUTTERS TO DRAIN (BUILDINGS WITH GUTTERS ONLY, SEE FIG 9). THE GRADE COULD ALSO BE PREPARED AT A 1/2 % SLOPE, FOR GUTTER BUILDINGS AND THE COLUMNS CAN ALL BE SET AT THE SAME HEIGHT (SEE SHT 7 FOR OPTIONS)

4. CUT AND FILL THE SITE UNTIL IT IS AT THE RECOMMENDED GRADE.

LAYOUT AND SQUARE THE FOUNDATION

1. ROUGHLY LOCATE THE CORNERS OF THE BUILDING AND DRIVE IN THE CORNER STAKES.

2. SET BATTER BOARDS APPROXIMATELY 6' (OR ADEQUATE DISTANCE FROM AUGER CLEARANCE) BACK FROM THE CORNERS IN EACH DIRECTION. SET INTERMEDIATE BATTER BOARDS OF THE BUILDING IS LONGER THAN 50' TO KEEP THE LINES FROM SAGGING OR BLOWING IN THE WIND.

3. LOCATE THE FIRST BUILDING CORNER POINT AND MARK IT WITH A STAKE OR NAIL HEAD.

4. MEASURE FROM CORNER POINT 1, THE SPECIFIED DIMENSION OF THE BUILDING, TO LOCATE CORNER POINT 2. PULL A TIGHT LINE BETWEEN BATTER BOARD "1A" AND BATTER BOARD "2A", MAKING SURE THE LINE PASSES OVER CORNER POINT 1 AND CORNER POINT 2. FASTEN THE LINE ONTO THE BATTER BOARDS AND CHECK IT WITH TRANSIT. MAKE SURE THE BATTER BOARDS AND LINES ARE LEVEL (SEE FIG. 1). VARIATIONS IN THIS WILL ULTIMATELY AFFECT THE EAVE HEIGHT.

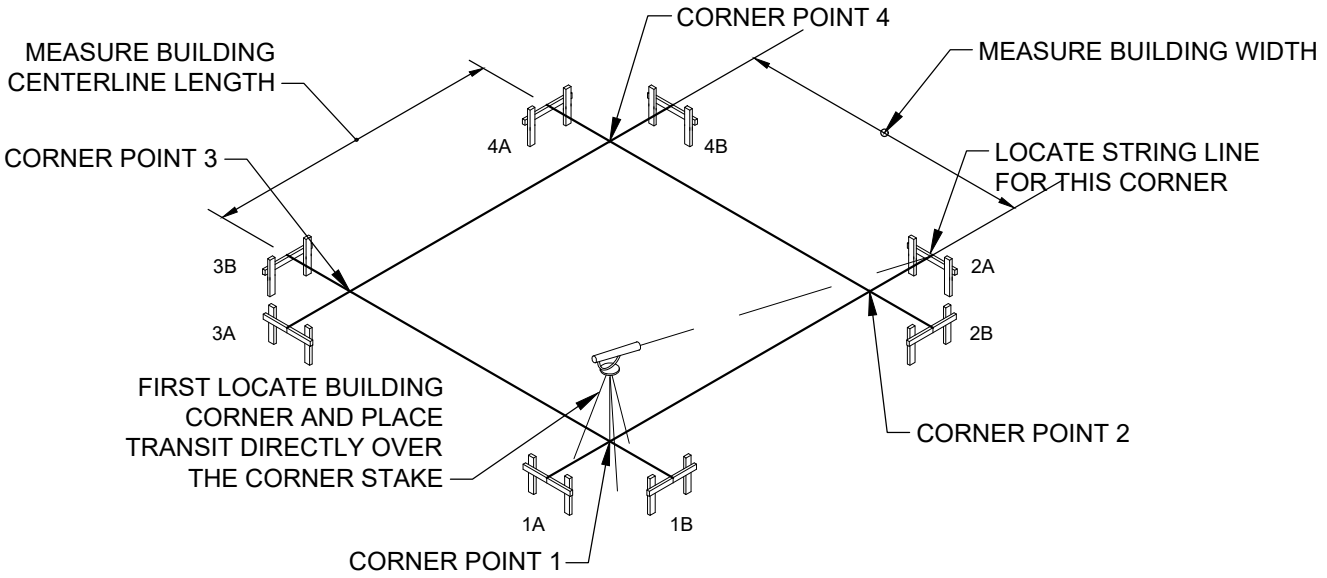

SEE PAGE 7 FOR GUTTER CONNECTED HOUSES

FIGURE 1 - LOCATING CORNER POINT 2

5. TO LOCATE THE THIRD CORNER POINT (FIG. 2), YOU MAY USE ONE OF TWO METHODS, THE DIAGONAL METHOD OR THE TRIANGLE METHOD.

THE DIAGONAL METHOD - RUN A LINE DIAGONALLY ACROSS FROM CORNER TO CORNER AND ADJUST THE LINES UNTIL THE DIAGONAL DIMENSIONS ARE EQUAL (SEE FIG. 3).

THE TRIANGLE METHOD - CREATE A 90° ANGLE FROM THE FIRST LINE USING CORNER POINT 1 AS A VERTEX. THIS ANGLE MAY BE ACCOMPLISHED BY USING TWO TAPE MEASURES AND THE CHART LISTED BELOW (SEE FIG. 4) (USE THIS METHOD FOR LARGER BUILDINGS WHERE THE LENGTH OF THE DIAGONAL EXCEEDS THE 100 FOOT TAPE MEASURE). WHEN YOU HAVE LOCATED CORNER POINT 3, PULL YOUR SECOND LINE BETWEEN BATTER BOARD "1B" AND BATTER BOARD "3B" MAKING SURE IT PASSES OVER CORNER POINT 1 AND CORNER POINT 3. CHECK WITH TRANSIT MAKING SURE THAT BATTER BOARDS AND LINES ARE LEVEL (SEE FIG. 2).

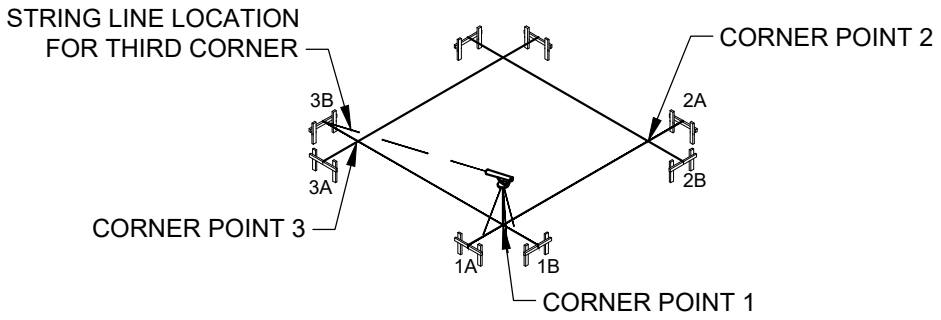

FIGURE 2 - LOCATING CORNER POINT 3

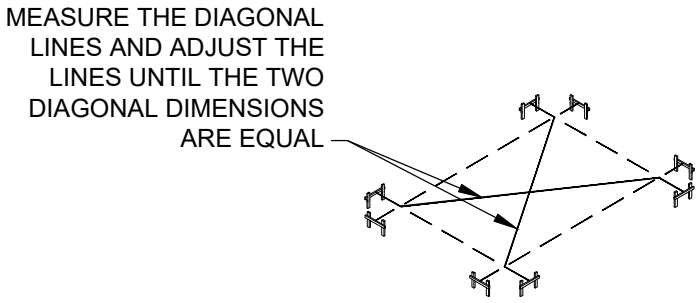

FIGURE 3 - DIAGONAL METHOD

$\sqrt{}$

DIMENSION A^2 + DIMENSION B^2 = DIMENSION C^2		
20'	15'	25'
24'	18'	30'
28'	21'	35'
32'	24'	40'
36'	27'	45'
40'	30'	50'

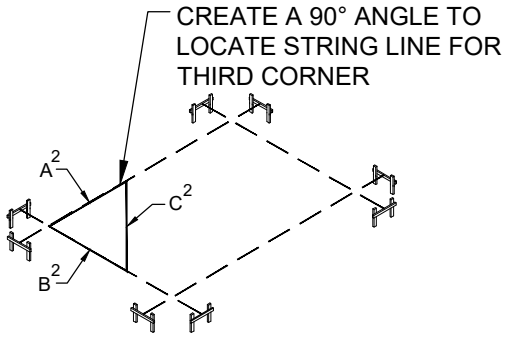

FIGURE 4 - TRIANGLE METHOD

6. TO LOCATE THE FOURTH CORNER POINT (FIG. 5), USING TWO TAPE MEASURES, FROM CORNER POINT 3 AND CORNER POINT 2, THE SPECIFIED LENGTH AND WIDTH. THE POINT AT WHICH THESE LINES INTERSECT WILL BE CORNER POINT 4.

7. NOW YOU MAY PULL YOUR LAST TWO LINES AND FASTEN THEM TO THE APPROPRIATE BATTER BOARDS. BE SURE TO CHECK THE LEVEL OF YOUR LINES (FIG. 5).

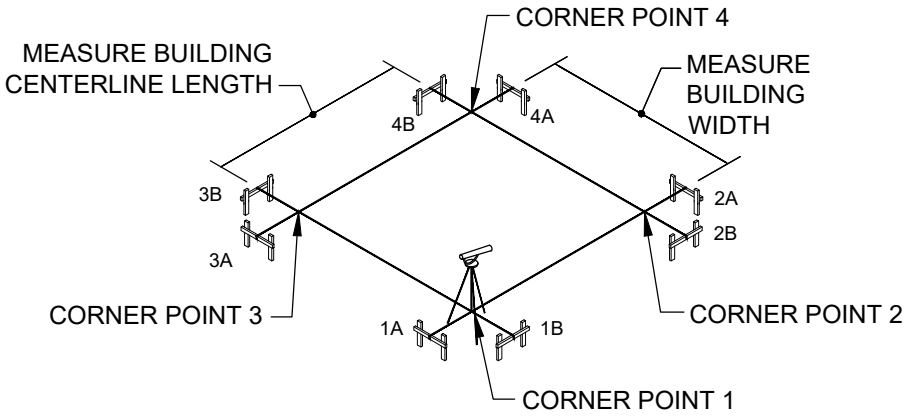

FIGURE 5 - LOCATING CORNER POINT 4

FIND COLUMN CENTERS

1. MARK THE CORNER POINTS ON THE LINES, AND USE A 10' TAPE MEASURE TO MARK THE INTERMEDIATE HOLE CENTERS ON THE LINES.

2. USING A LEVEL FOR VERTICAL ACCURACY, MARK THE HOLE CENTERS ON THE GROUND WITH NAILS. PAINT THE NAIL HEADS WITH FLUORESCENT PAINT.

3. MEASURE DOWN THE WIDTH OF THE LINES AND MARK THE END WALL UPRIGHT CENTERS IN THE SAME MANNER.

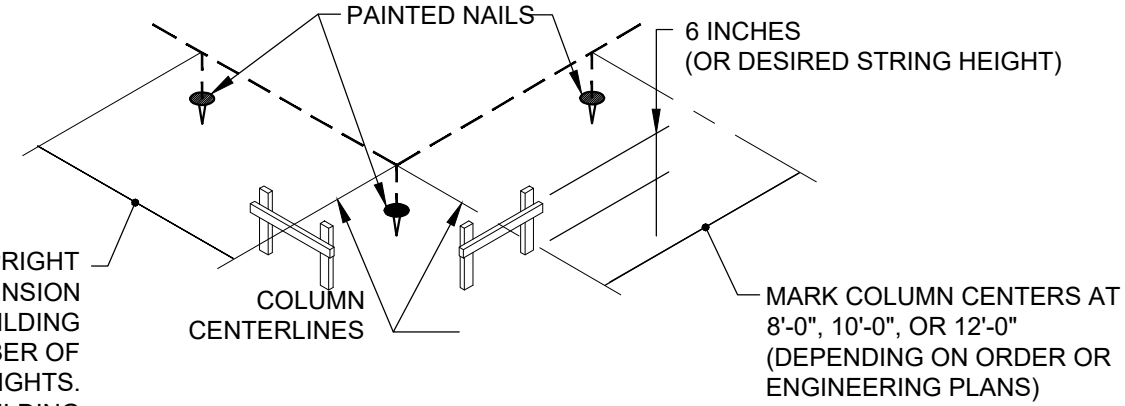

FIGURE 6 - LOCATING COLUMN CENTERS

AUGER COLUMN HOLES

1. AT THE POINT THAT THE LINES MEET THE BATTER BOARDS, CLEARLY AND ACCURATELY MARK THE PLACEMENT OF THE LINES. MAKE SURE ALL THE BATTER BOARDS ARE MARKED.

2. REMOVE THE LINES.

3. AUGER THE HOLES DIAMETER AND DEPTH (SEE ENGINEERING DRAWINGS OR CONSULT YOUR LOCAL BUILDING DEPARTMENT FOR HOLE DIMENSIONS).

4. AFTER DIGGING THE HOLES FOR END WALL UPRIGHTS, REFILL LOOSELY WITH DIRT, UNTIL READY FOR USE (SEE FIG. 9).

CAUTION

BE SURE THERE ARE NO UNDERGROUND OR OVERHEAD ELECTRICAL WIRES, WATER PIPES, GAS LINES, *ETC*. ON OR NEAR THE JOB SITE.

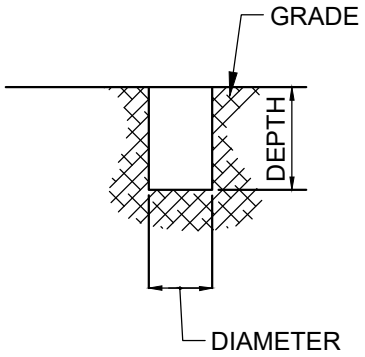

FIGURE 7 - AUGER HOLE

OFFSETTING THE LINES

1. OFFSETTING OF THE LINES SHOULD BE DONE THE DAY THE CONCRETE IS POURED AND NOT LEFT OVERNIGHT TO PREVENT STRETCHING OR KNOCKING DOWN LINES.

2. TO FIND THE COLUMN SET LINES, YOU MUST RESTORING THE FOUNDATION LAYOUT. FROM THE CENTER LINE MARKS ON THE BATTER BOARDS, MEASURE 1/2 THE SIZE OF THE COLUMN AND MOVE THE LINES TO THAT MARK. (ALWAYS MOVE THE LINES IN THE SAME DIRECTION TO PREVENT CONFUSION AND MISPLACEMENT OF COLUMNS (SEE FIG. 8).

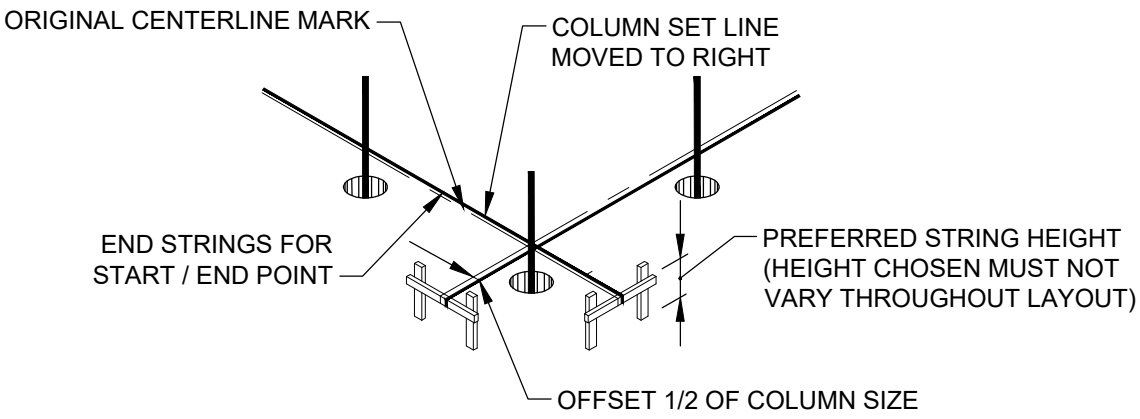

FIGURE 8 - OFFSETTING OF THE COLUMN SET LINES

SLOPING "GUTTER BUILDINGS" FOR PROPER WATER DRAINAGE

1. IT IS PREFERRED TO SLOPE THE GRADE FOR WATER DRAINING (GUTTERED) GREENHOUSES. SLOPE THE GRADE ALONG THE LENGTH OF THE FOUNDATION KEEPING THE FRONT AND BACK COLUMN LINES PARALLEL. A SLOPE OF 3/4" EVERY 12'-0" (APPROXIMATELY 1/2 % SLOPE) WILL INSURE PROPER DRAINAGE AT THE GUTTERS. IF THIS OPTION IS CHOSEN, THEN ALL COLUMNS CAN BE SET TO THE SAME HEIGHT, AND BE ABLE TO ACHIEVE A CONSTANT BUILDING HEIGHT. IF THE BUILDING IS VERY LONG (OVER 300' LONG), IT IS ADVISABLE TO HAVE THE PEAK AT THE CENTER OF THE BUILDING, AND HAVE (2) OUTLETS, (1) AT EACH THE END WALL. THIS DETERMINATION WILL NORMALLY BE TAKEN CARE OF BY THE DESIGN TEAM AT CONLEY'S.

SLOPE LINES

1. IF SLOPING THE GRADE IS NOT DESIRED, THE THE SLOPE CAN BE ACHEIVED BY SETTING THE COLUMNS AT SPECIFIC HEIGHTS ALONG THE LENGTH OF THE BUILDING. PLEASE NOTE THAT THE UNDER GUTTER (UG) HEIGHT OF THE BUILDING IS MEANT TO BE FOR THE HIGH SIDE OF THE BUILDING (THE PEAK UG HEIGHT AT THE CENTER OF THE BUILDING FOR LONGER THAN 300' BUILDINGS).

   SLOPE THE COLUMN LINES ALONG THE LENGTH OF THE FOUNDATION KEEPING THE FRONT AND BACK COLUMN LINES PARALLEL. THIS WILL INSURE PROPER DRAINAGE (SEE FIG. 9).

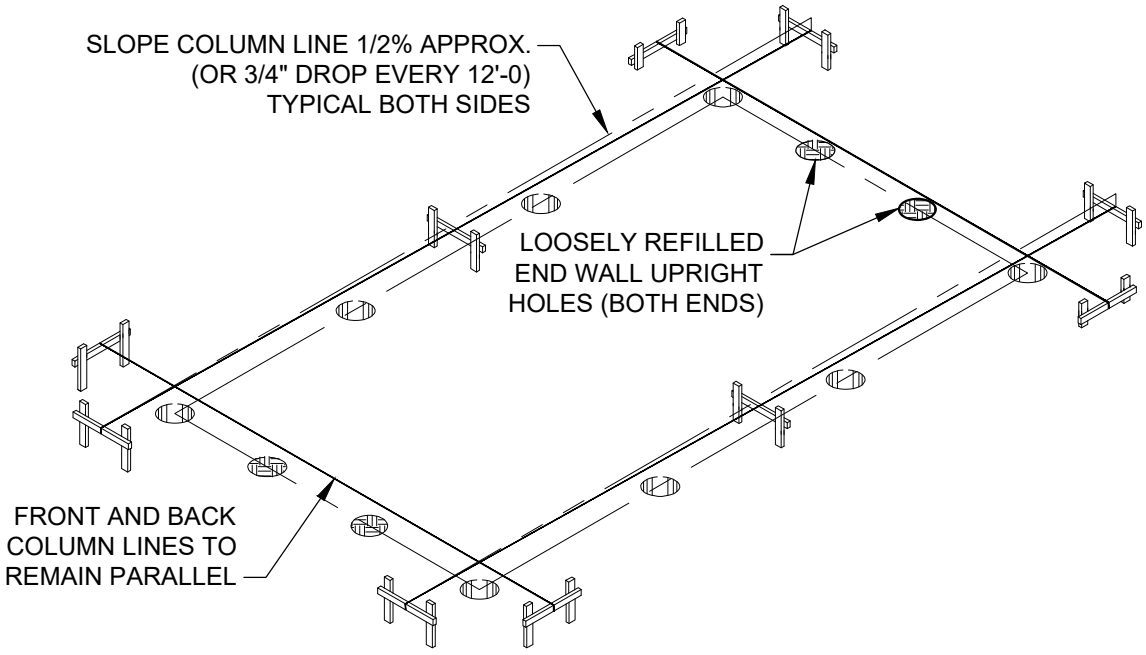

NOTE: THIS TECHNIQUE TO BE USED WITH GUTTER HOUSES ONLY

FIGURE 9 - SLOPING COLUMN LINES

MARK CENTERS ON COLUMNS

1. FROM THE CENTER LINE, MARK ON THE BATTER BOARDS (NOT THE COLUMN SET MARK) THE LENGTH OF LINES, AND MARK THE INTERMEDIATE CENTERS.

2. MARK THE END WALL UPRIGHTS IN THE SAME MANNER. PLEASE NOTE THAT THE OFFSETS FOR END WALL INTERMEDIATE COLUMNS MAY BE DIFFERENT THAN THE OFFSET OF THE SIDE WALL COLUMNS DUE TO THE DIFFERENCE IN COLUMN SIZE. THE CENTER LINES OF COLUMNS MUST BE THE CENTER LINE END WALL COLUMNS.

MARK COLUMNS

1. TO FIND THE ABOVE GROUND COLUMN HEIGHT, MEASURE FROM THE TOP OF THE COLUMN, THIS DISTANCE, AND SUBTRACT THE STRING HEIGHT. MARK THE COLUMN AT THIS POINT WITH A FELT TIP MARKER. CONTINUE WITH REMAINING COLUMNS (SEE FIG. 10).

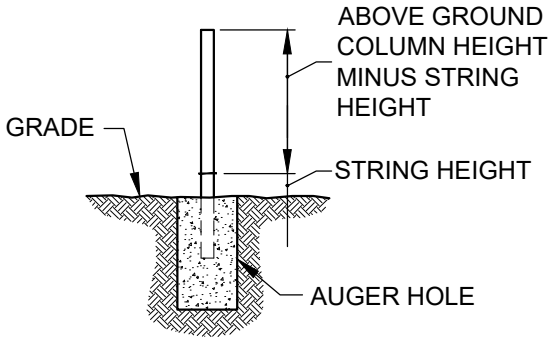

FIGURE 10-MARKING COLUMNS

SET COLUMNS

1. POUR CONCRETE INTO THE FIRST HOLE. 2" SLUMP, 5 SACK MIX, AND 3/4" ROCK IS THE MOST POPULAR MIX TO SUPPORT COLUMNS.

2. PUSH THE COLUMN INTO THE CONCRETE AT THE CENTER MARK ON THE STRING (BE SURE THE COLUMN IS NOT ACTUALLY TOUCHING STRING) UNTIL THE MARK ON COLUMN LINES UP WITH THE STRING. THE COLUMN MUST BE PLUMB IN BOTH DIRECTIONS BEFORE MOVING ON TO THE NEXT COLUMN.

3. MOVE ON TO THE NEXT COLUMN, POUR CONCRETE THEN SET THE COLUMN. NEVER POUR ALL THE CONCRETE FIRST THEN GO BACK AND SET COLUMNS AS THE CONCRETE SETS UP TOO FAST.

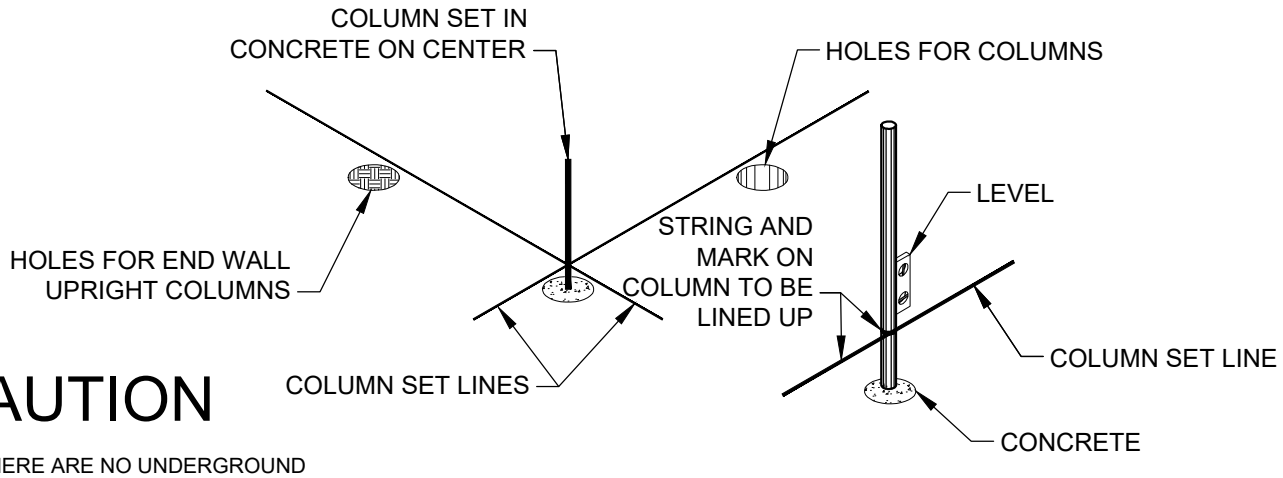

CAUTION

BE SURE THERE ARE NO UNDERGROUND OR OVERHEAD WIRES, WATER PIPES, GAS LINES, ETC.. ON OR NEAR THE JOB SITE.

SEE PAGE 6 FOR HOLE AUGURING

FIGURE 11-SETTING THE COLUMNS

ASSEMBLING WEBBED TRUSS

1. LOOSELY BOLT CONNECTIONS 2 PCS WITH (2) 1/2" X 1" MACHINE BOLTS AND (2) 1/2" HEX NUTS (DO NOT TIGHTEN BOLTS AT THIS TIME).

2. CONNECT LOWER CHORDS 2 PCS WITH THE LOWER CHORD SPLICE USING (4 OR 6) 3/8" X 2 3/4" MACHINE BOLTS AND (4 OR 6) 3/8" HEX NUTS OR (4 OR 6) 1/2" X 2 3/4" MACHINE BOLTS AND (4 OR 6) 1/2" HEX NUTS.

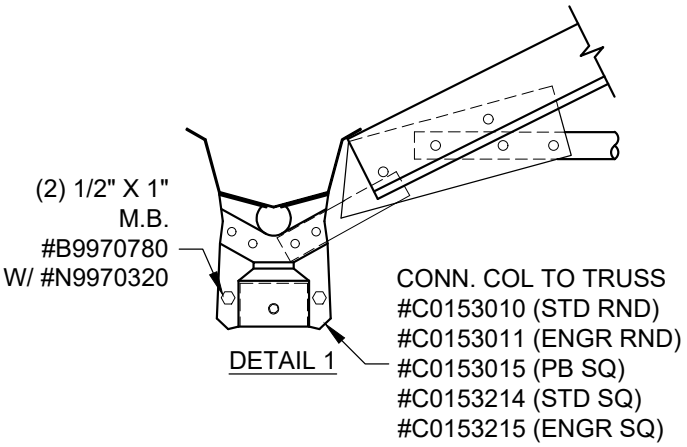

DETAIL 1

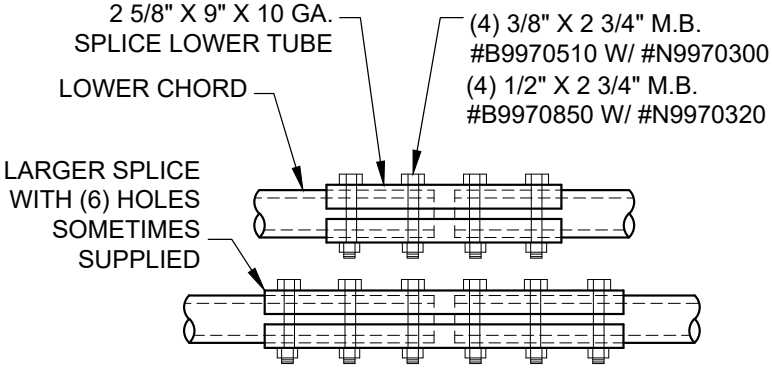

NOTE: SPLICE ONLY USED ON BLDGS OVER 24'

DETAIL 2

3. A) CONNECT THE UPPER CHORDS 2 PCS TOGETHER WITH THE CHEVRON SPLICE USING (2) 1/2" X 2 3/4" MACHINE BOLT WITH (2) 1/2" HEX NUTS AND (2) 3/8" X 2 3/4" MACHINE BOLT WITH (2) 3/8" HEX NUTS.

B) PLACE ON THE NO. 2 TRUSS OF THE HIGH AND LOW END OF THE BUILDING FOUNDATION PLACE A 3/8" X 3" EYE BOLT WITH A 3/8" HEX NUT IN THE CENTER HOLE OF THE CHEVRON SPLICE, WITH THE EYE BOLT FACING OUT OF THE BUILDING.

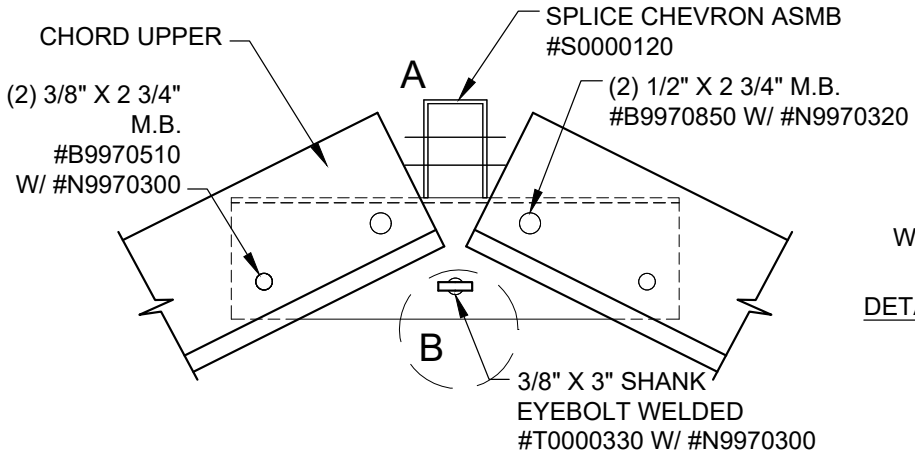

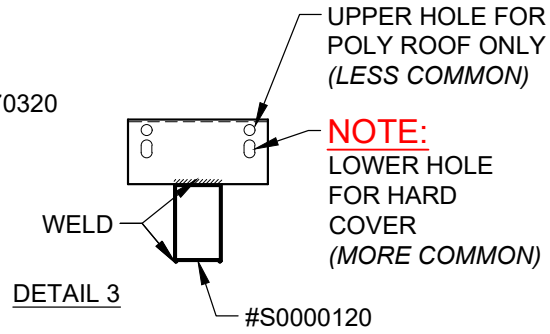

DETAIL 3

4. CONNECT UPPER AND LOWER CHORDS TO THE HEEL PLATE ASSEMBLY WITH (5) 1/2" X 2 3/4" MACHINE BOLTS WITH (5) 1/2" HEX NUTS.

5. AFTER TRUSS IS ASSEMBLED SLIDE THE HEEL PLATE ASSEMBLY INTO THE COLUMN CONNECTION ASSEMBLY AND BOLT TOGETHER WITH (2) 3/8" X 2 3/4" MACHINE BOLTS WITH 3/8" HEX NUTS OR (2) 1/2" X 2 3/4" MACHINE BOLTS WITH 1/2" HEX NUTS..

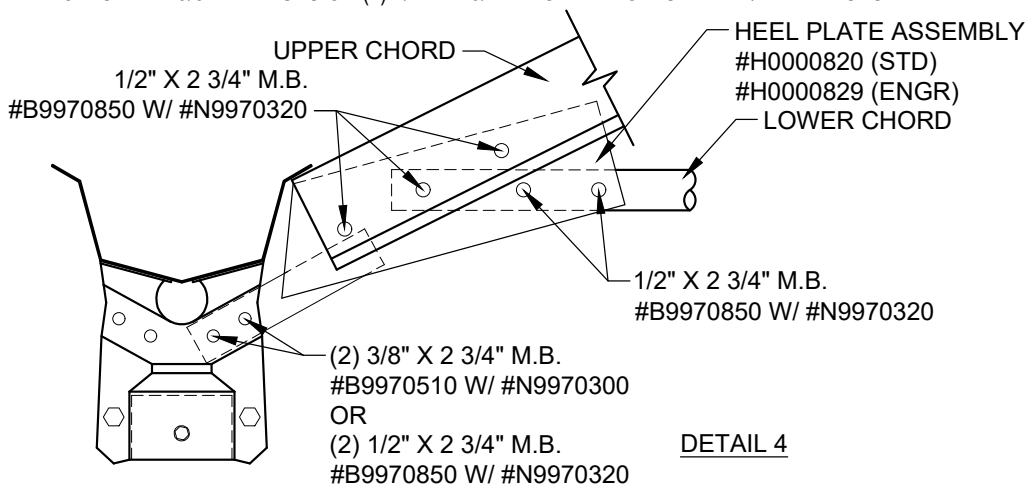

DETAIL 4

6. INSTALL THE PURLIN TABS ON EACH SIDE OF THE UPPER CHORD (REFER TO BUILDING SUPPLEMENTAL FOR TAB INFORMATION, PAGE 5, NOTE 1).

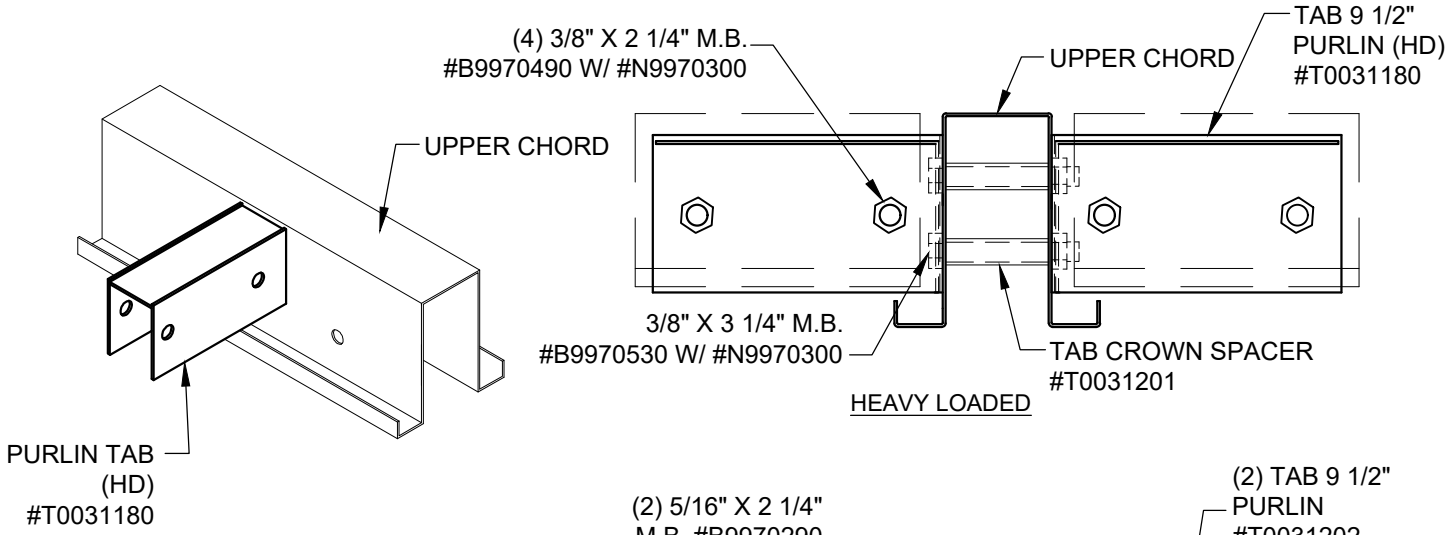

HEAVY LOADED

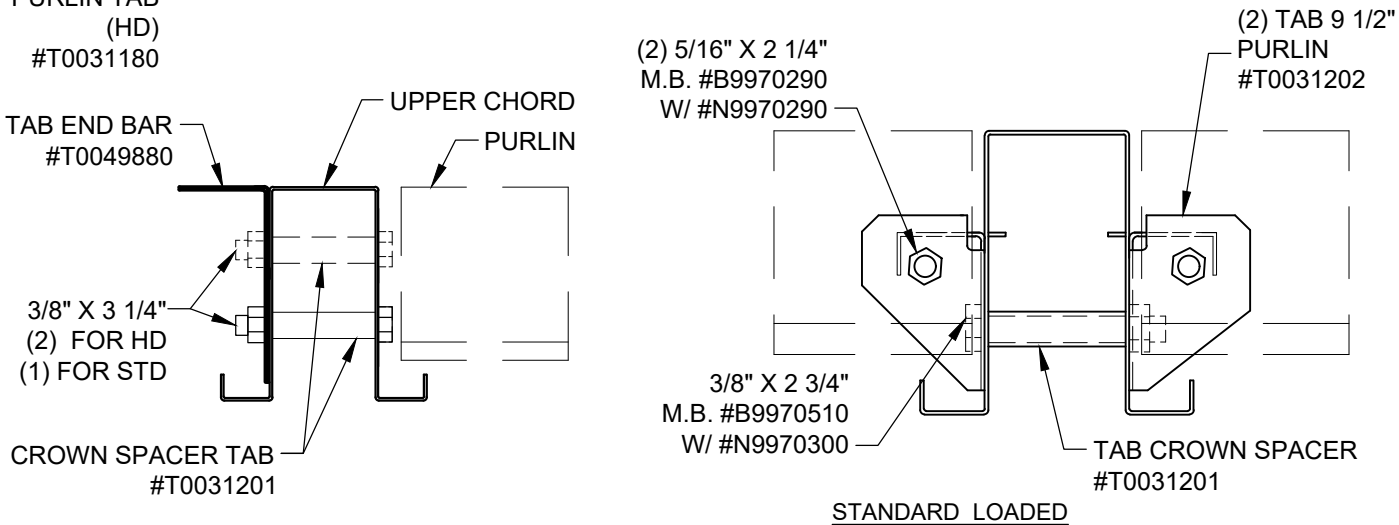

STANDARD LOADED

END BAR @ END WALL

DETAIL 5

7. LAYOUT THE FILLER TUBES (REFER TO BUILDING SUPPLEMENTAL).

A) BOLT TO THE UPPER CHORD WITH A 3/8" X 2 3/4" HEX BOLTS AND A 3/8" HEX NUTS.

B) BOLT TO THE LOWER CHORD WITH A 3/8" X 2 3/4" HEX BOLT AND A 3/8" HEX NUT OR 1/2" X 2 3/4" HEX BOLT AND A 1/2" HEX NUT.

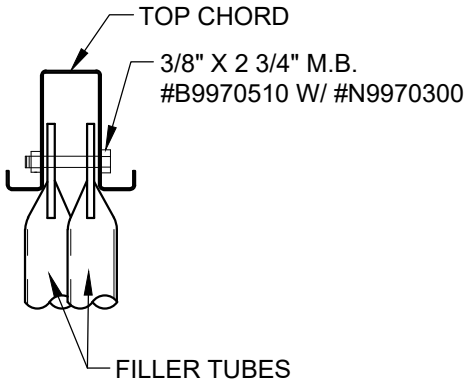

DETAIL 6A

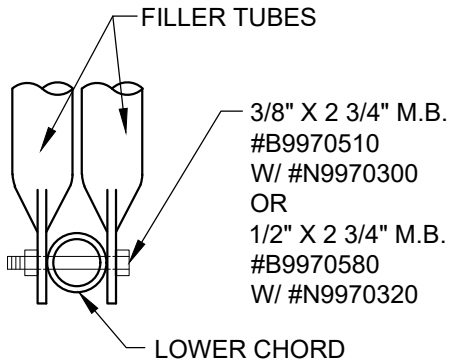

DETAIL 6B

END WALL TRUSS ASSEMBLY

1. CONNECT THE UPPER CHORDS 2 PCS TOGETHER WITH THE CHEVRON SPLICE 1 PCS USING (2) 1/2" X 2 3/4" MACHINE BOLTS AND (2) 1/2" HEX NUT, AND 3/8" X 2 3/4" MACHINE BOLTS AND (2) 3/8" HEX NUT.

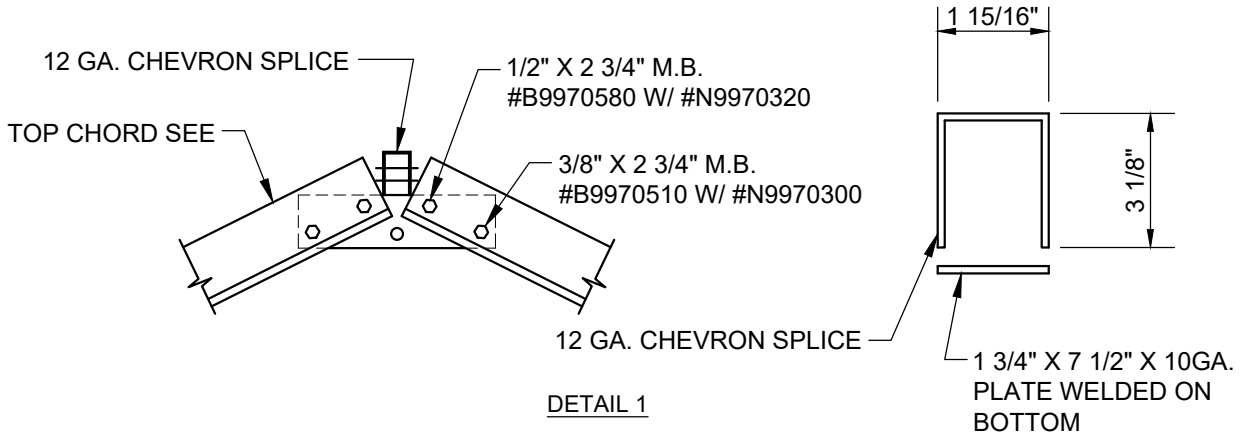

DETAIL 1

2. LOOSELY BOLT AT HEEL PLATE CONNECTIONS WITH A 1/2" X 2 3/4" MACHINE BOLT 1 SINGLE OR DOUBLE TURNBUCKLE 1/2" BOLT AND 1/2" HEX NUTS.

NOTE: DO NOT TIGHTEN BOLTS AT THIS TIME.

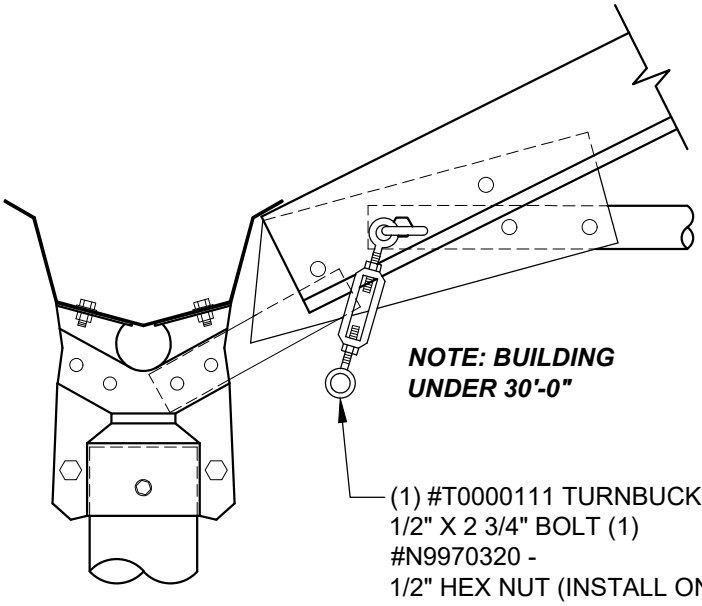

DETAIL 2A - UNDER 30' BUILDING

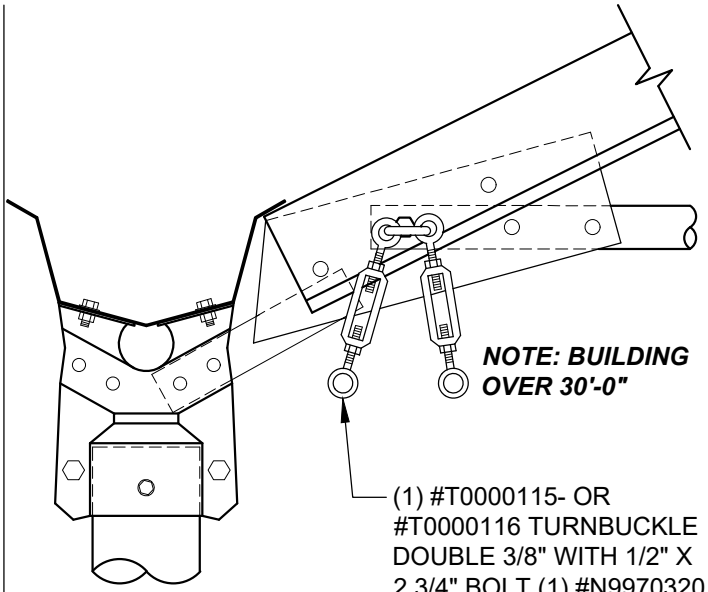

DETAIL 2B - OVER 30' BUILDING

3. INSTALL THE PURLIN TAB ON THE INSIDE OF UPPER CHORD, WITH A END BAR TAB ON THE OUTSIDE OF THE UPPER CHORD (REFER TO BUILDING SUPPLEMENTAL FOR TAB INFORMATION, PAGE 5, NOTE 2).

4. REFER TO BUILDING SUPPLEMENTAL FOR TRUSS CONNECTION TO COLUMNS, PAGE 9, NOTES 4 AND 5.

REFER TO FIG. 13 ON PAGE 12 FOR LOCATIONS OF DETAILS SHOWN ABOVE.

WEBBED TRUSS SECTION

NOTE:
REFER TO
SUPPLEMENTAL FOR
WEB SPACING

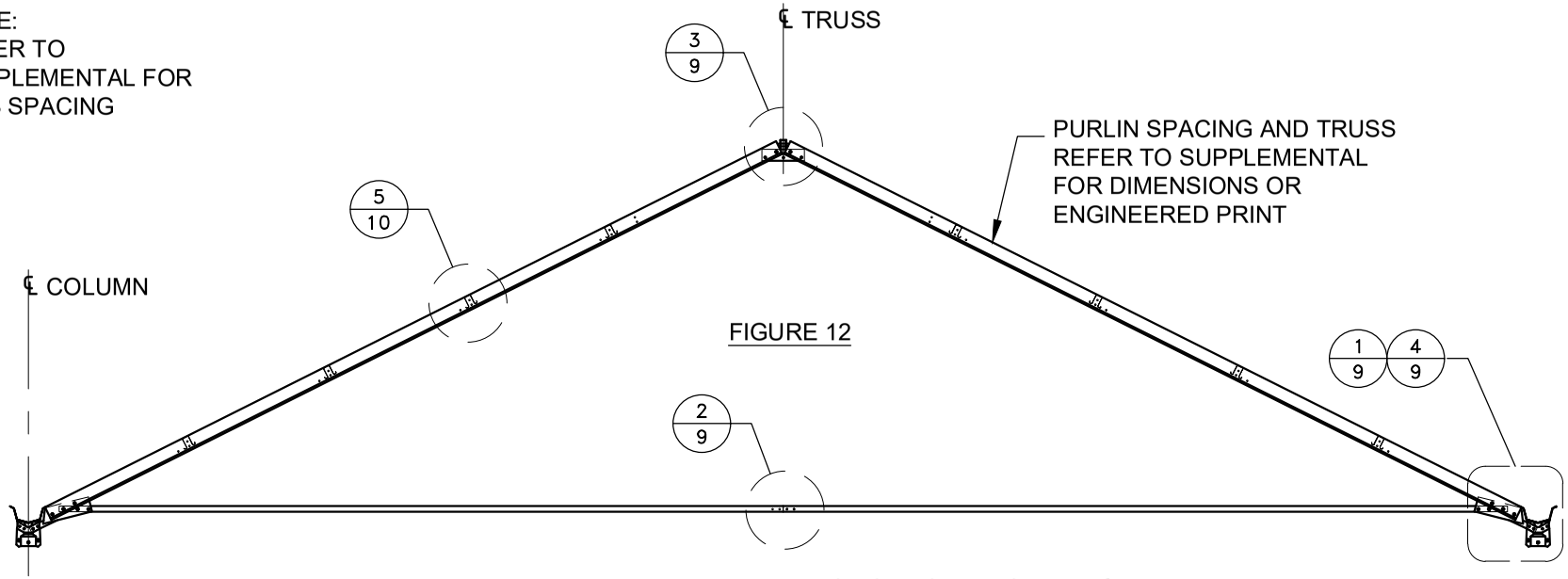

FIGURE 12

END WALL TRUSS SECTION

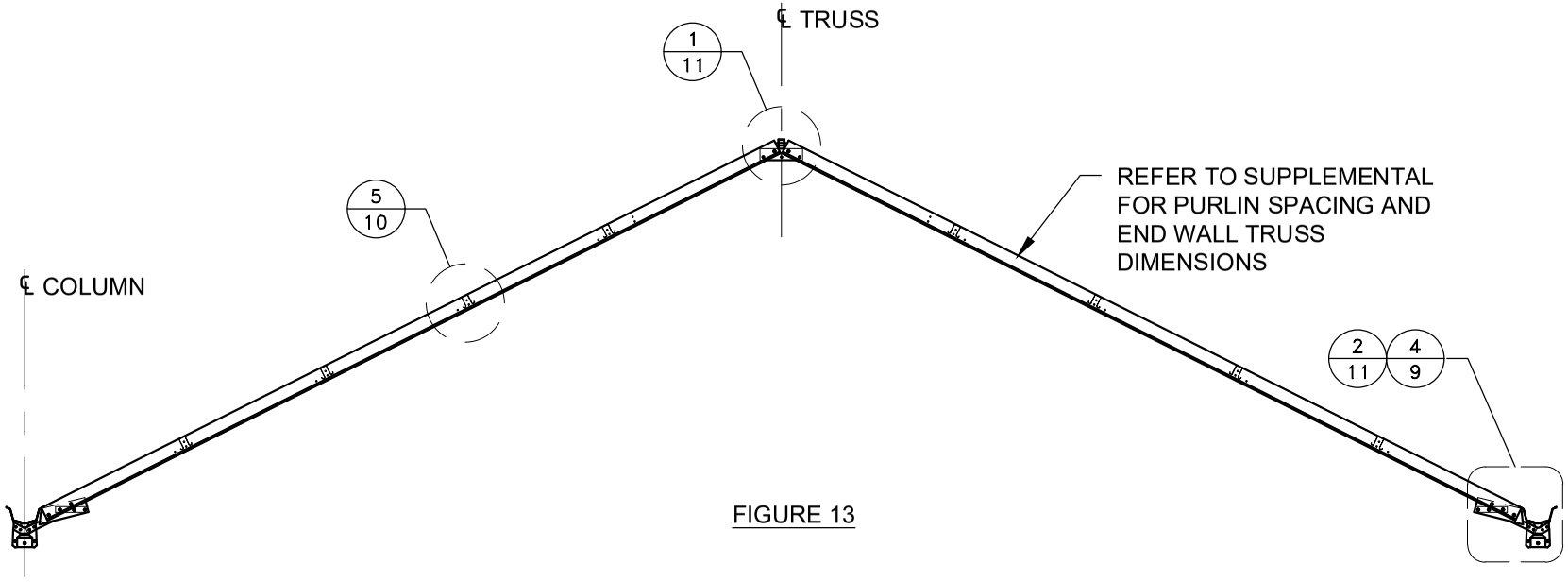

FIGURE 13

INSTALLATION OF TRUSSES AND PURLINS

1. SLIDE 2 CLAMP BRACE BANDS OVER THE 2ND AND 3RD INTERIOR COLUMNS FOR FUTURE INSTALLATION OF "X" BRACING INSTALLED AT EACH END OF BUILDING (REFER TO PAGES 21 AND 22). IF CLAMP LEG BRACE IS REQUIRED (AS CALLED OUT ON NOTE 2), THEN AT LOCATIONS WITH BOTH BRACE BAND AND CLAMP LEG BRACE, MAKE SURE THEY GO IN THE ORDER OF 1)FIRST BRACE BAND, 2)CLAMP LEG BRACE, 3)SECOND BRACE BAND. BUILDINGS WITH SQUARE COLUMNS, USE A 2 PIECE TAB SO THERE IS NO NEED TO PLACE THEM AT THIS TIME.

2. ON BUILDINGS WITH AN UNDER GUTTER HEIGHT OF 10'-0" OR 12'-0", OR BUILDINGS REQUIRING KNEE BRACING, SLIDE A BRACE CLAMP ON EVERY SIDE WALL COLUMN (EXCEPT FOR THE FIRST & LAST COLUMN). SEE NOTE 1.

3. USE A BOOM TRUCK TO LIFT AND SET TRUSSES. LEAN ASSEMBLED TRUSSES AGAINST COLUMNS TO KEEP CENTER CLEAR FOR TRUCK. STARTING FROM THE CENTER OF EACH HOUSE AND WORKING YOUR WAY OUT TO EACH END, SET THE FIRST TRUSS ONTO THE COLUMNS. TIGHTEN BOLTS DOWN ON COLUMN CONNECTIONS AT COLUMNS (SEE FIG. 14, AND REFER TO PAGE 9, DETAIL 3).

4. BRACE TRUSS WITH ROPES OR CABLES AS SHOWN BELOW (FIG. 14). MAKE SURE TRUSS IS PLUMB AND SQUARE.

5. BEFORE SETTING 2ND TRUSS MAKE SURE EYE BOLTS ARE IN THE PROPER LOCATIONS AND FACING IN THE PROPER DIRECTIONS (SEE FIG. 14, AND REFER TO PAGES 9, DETAIL 3B AND 10, DETAIL 5B).

6. SET 2ND TRUSS HIGH END OF BUILDING FOUNDATION WITH EYE BOLTS FACING OUT OF BUILDING (TYPICAL FOR HIGH AND LOW ENDS OF BUILDING FOUNDATION). TIGHTEN BOLTS DOWN ON COLUMN CONNECTIONS AT COLUMNS (SEE FIG. 14 BELOW, AND REFER TO PAGE 9, DETAIL 3).

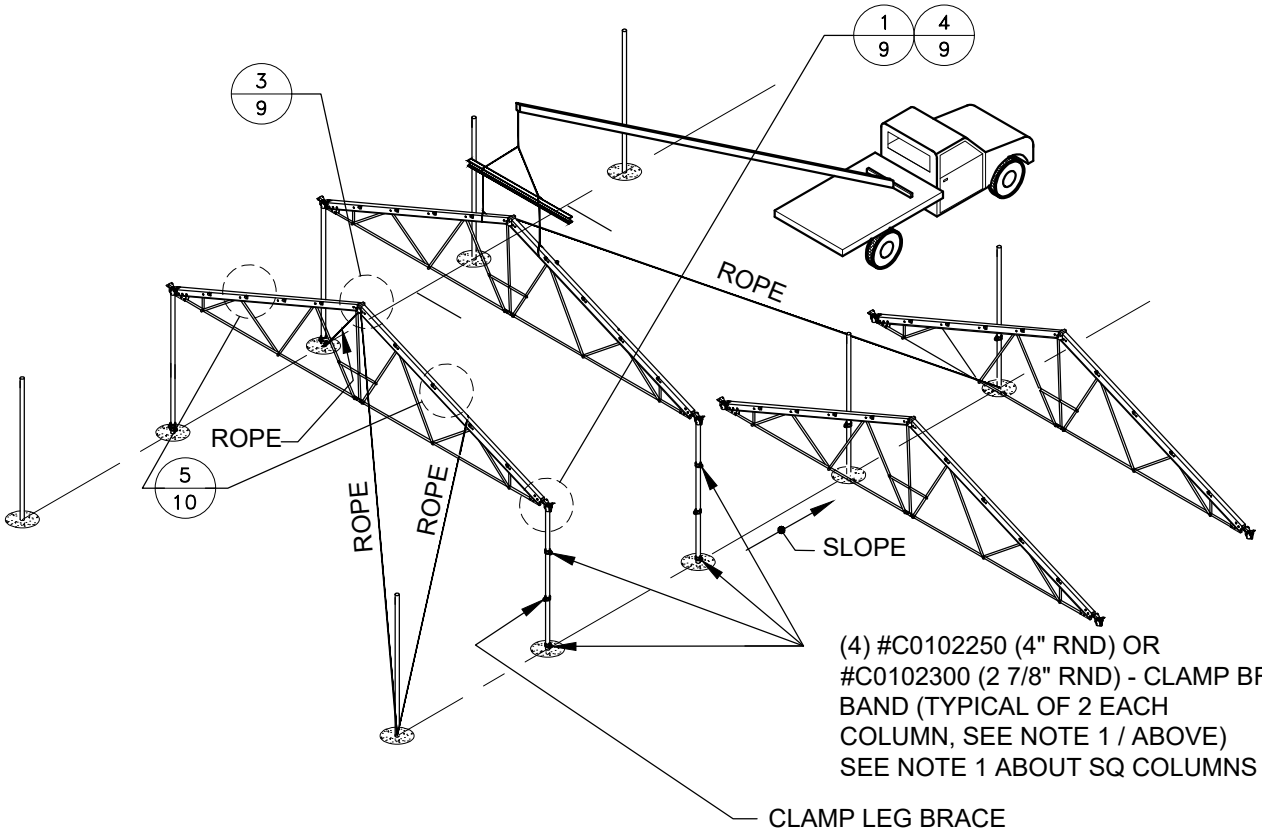

FIGURE 14

NOTE:
THIS DRAWING IS A REPRESENTATION.
TRUSSES DEPICTED MAY NOT BE THE
SAME AS THE TRUSSES YOU HAVE
PURCHASED.

7. INSTALL THE PURLINS BETWEEN THE 2ND AND 3RD TRUSSES.

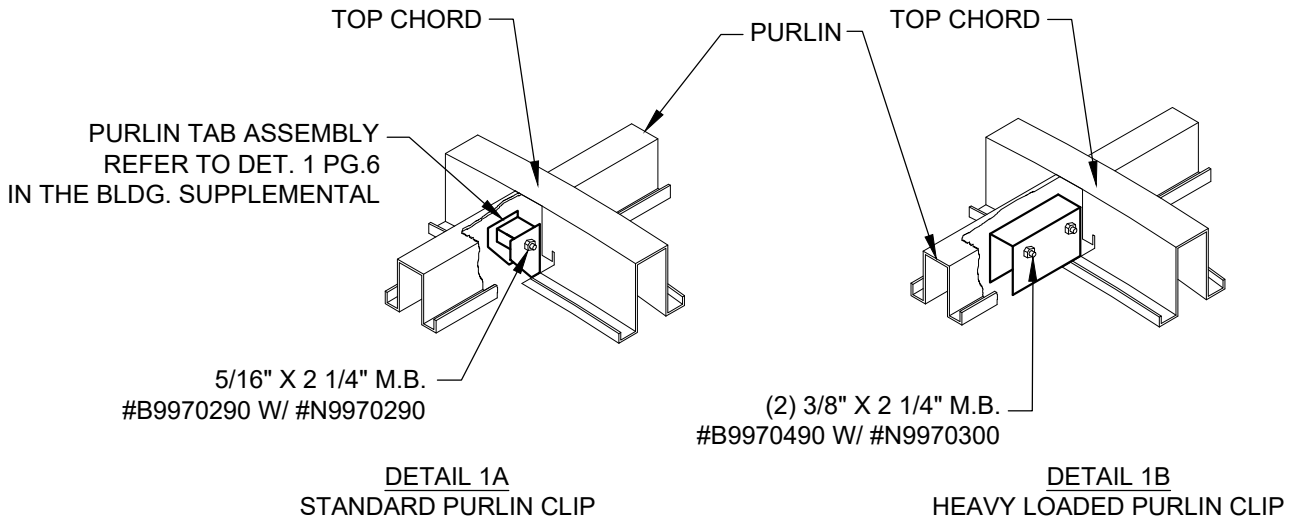

DETAIL 1A
STANDARD PURLIN CLIP

DETAIL 1B
HEAVY LOADED PURLIN CLIP

7. (A) INSTALLING THE RIDGE PURLIN BETWEEN THE 2ND AND 3RD TRUSSES.

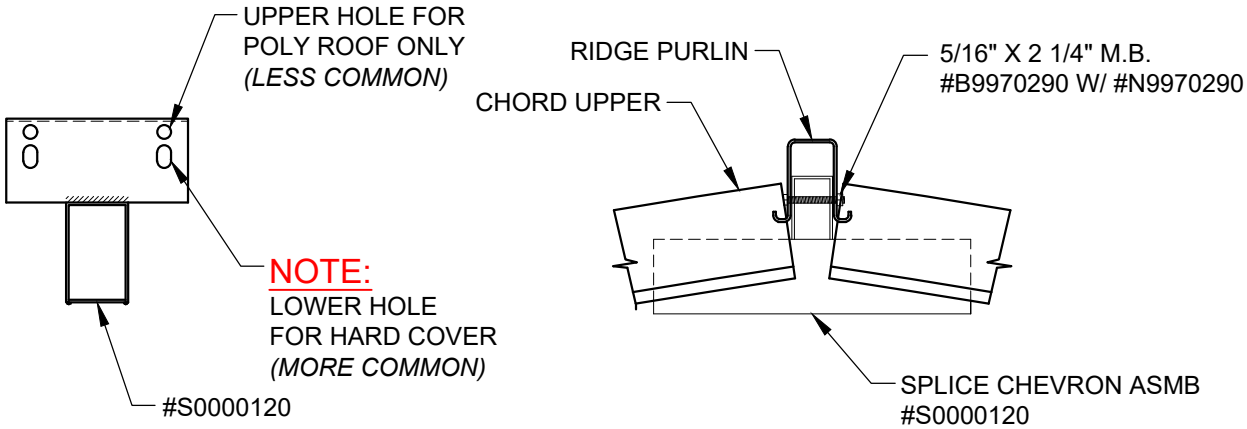

DETAIL 2A

DETAIL 2B

(B) EACH CHEVRON ASSEMBLY IS PROVIDED WITH TWO SETS OF HOLES OR SLOTS. PROVIDED THE ROOF IS TO BE GLAZED WITH RIGID COVERING THEN THE RIDGE PURLIN NEEDS TO BE BOLTED TO THE LOWER SET OF HOLES. PROVIDED THE ROOF IS TO BE GLAZED WITH POLYETHYLENE COVERING THEN THE RIDGE PURLIN NEEDS TO BE BOLTED TO THE UPPER SET OF HOLES.

8. SET THE END WALL TRUSS MAKING SURE THE TURNBUCKLES ARE FACING INWARD, TIGHTEN THE BOLTS DOWN ON THE COLUMN CONNECTIONS AT THE COLUMNS (REFER TO PAGE 11, DETAIL 2).

9. INSTALL THE PURLINS BETWEEN THE END WALL AND THE 2ND TRUSS (SEE FIG. 15, AND REFER TO PAGE 14, DETAILS 6A AND 6B).

10. SET THE REMAINING TRUSSES AND PURLINS FOLLOWING THIS METHOD.

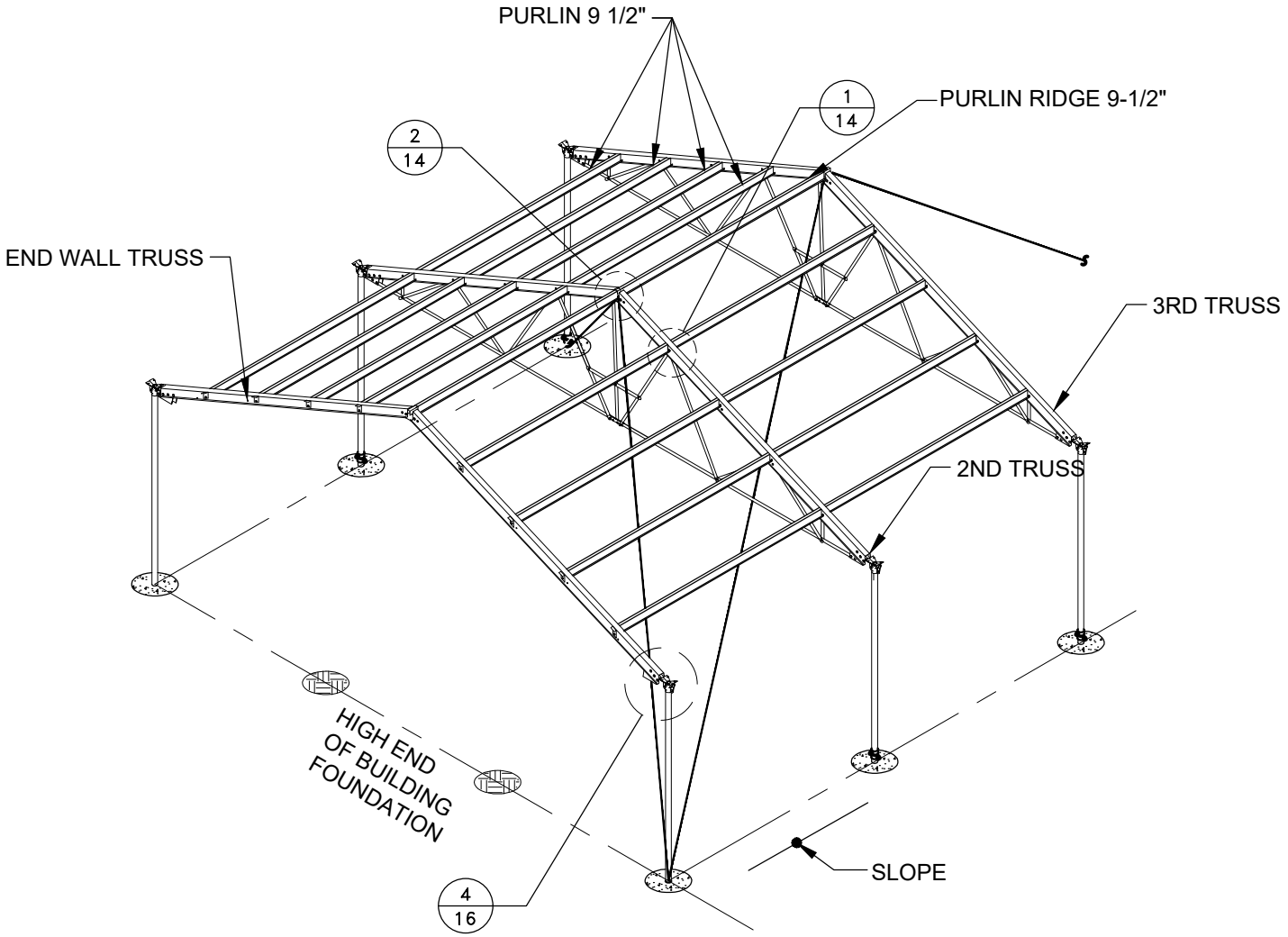

FIGURE 15

GUTTER INSTALLATION

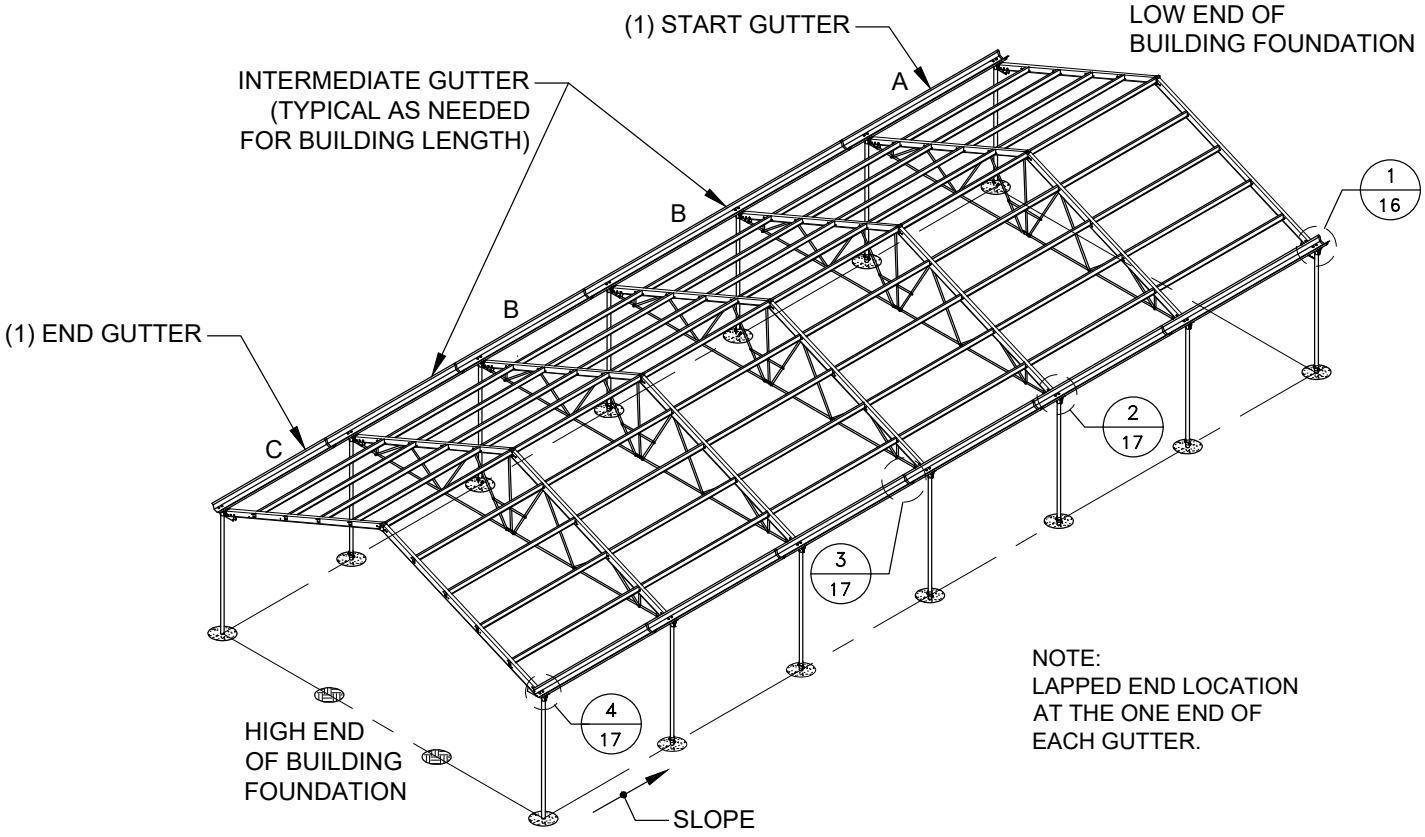

1. BEGIN WITH THE START GUTTER AT THE LOW END OF THE BUILDING FOUNDATION. (NOTE: LAPPED END LOCATION AT ONE END OF EACH GUTTER).

2. CONNECT THE GUTTER TO THE COLUMN CONNECTION WITH (4) 5/16" X 3/4" MACHINE BOLTS WITH RUBBER WASHERS AND (4) 5/16" HEX NUTS.

3. ADD THE GUTTER OUTLET WITH (4) 5/16" X 3/4" MACHINE BOLT WITH RUBBER WASHERS AND (4) 5/16" HEX NUT. (NOTE: GUTTER OUTLET WITH 5-5/8" Ø SPOUT (G00092400) PROVIDED BY CONLEY'S, CUSTOMER IS RESPONSIBLE FOR PLUMBING TUBE AND ACCESSORIES TO GET TO GROUND LEVEL.

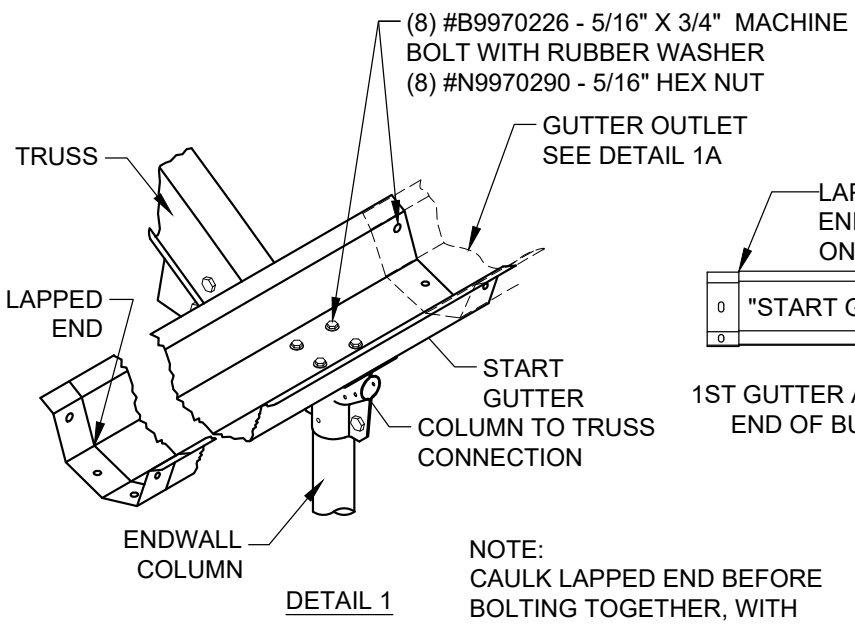

DETAIL 1

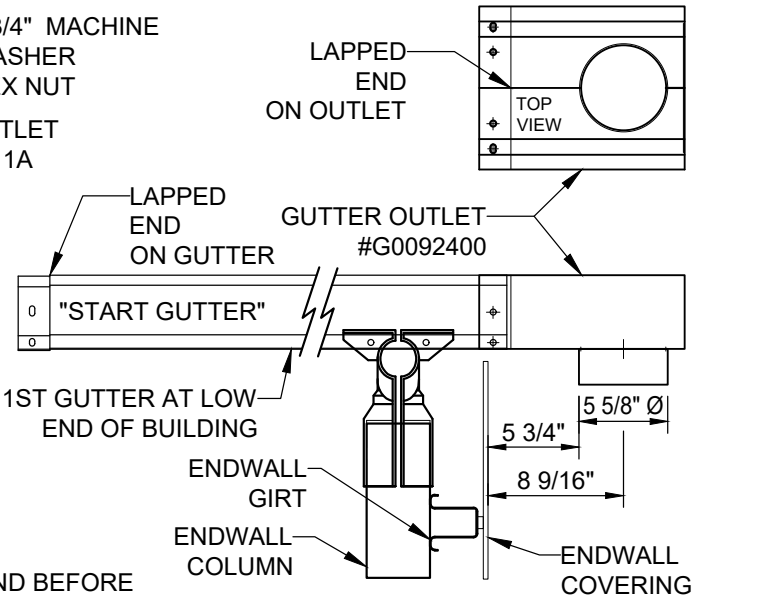

DETAIL 1A

NOTE:
CAULK LAPPED END BEFORE BOLTING TOGETHER, WITH C9970080 CAULKING BUTYL FLEX

3. NEXT INSTALL THE INTERMEDIATE GUTTERS TO THE COLUMN CONNECTION WITH (4) 5/16" X 3/4" MACHINE BOLT WITH RUBBER WASHERS AND (4) 5/16" HEX NUTS.

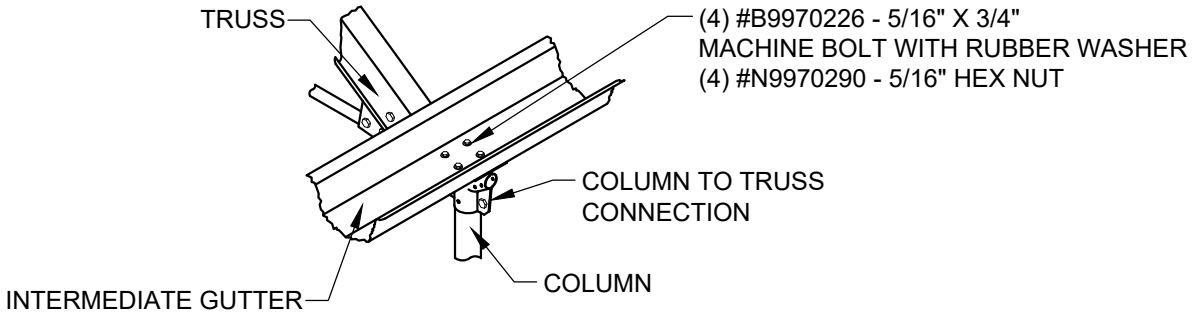

DETAIL 2

4. CONNECT THE GUTTERS AT THE GUTTER LAP EVERY 12' ON CENTER, TYPICAL.

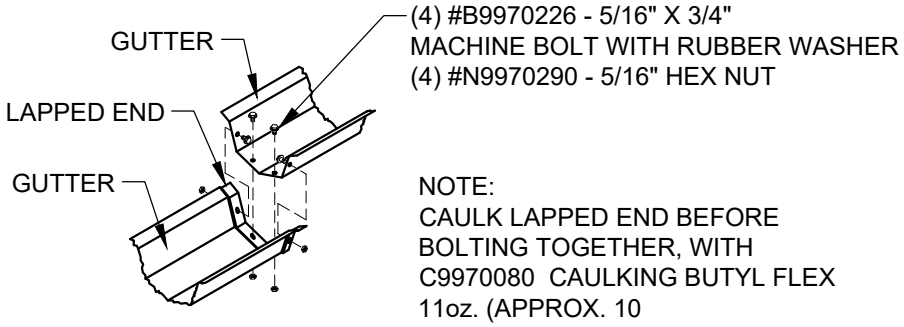

DETAIL 3

5. AFTER ALL THE INTERMEDIATE GUTTERS HAVE BEEN INSTALLED, INSTALL THE END GUTTER, WHICH IS REFERRED TO AS THE 'STOP GUTTER' TO THE COLUMN CONNECTION WITH (4) 5/16" X 3/4" MACHINE BOLT WITH RUBBER WASHERS AND (4) 5/16" HEX NUT.

6. ADD THE END CAP WITH (4) 5/16" X 3/4" MACHINE BOLT WITH RUBBER WASHERS AND (4) 5/16" HEX NUT.

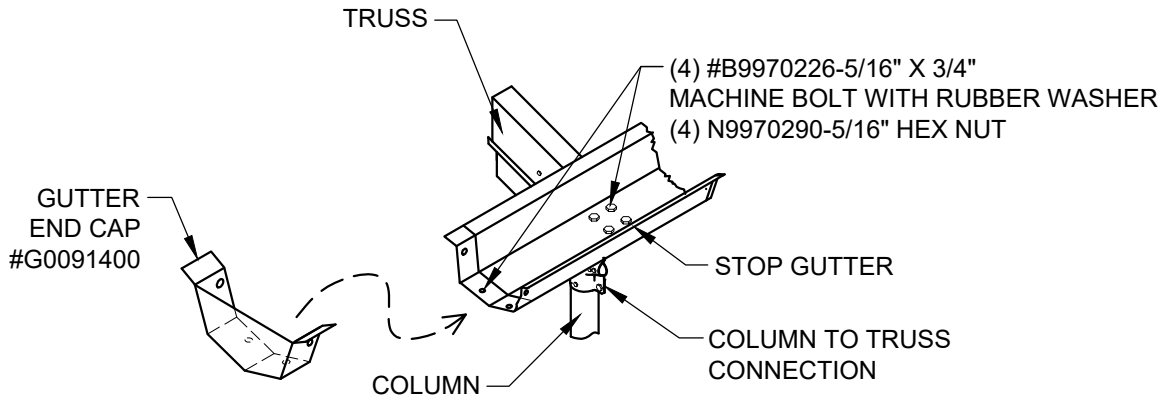

NOTE:
CAULK LAPPED END BEFORE
BOLTING TOGETHER, WITH
C9970080 CAULKING BUTYL FLEX

DETAIL 4

END WALL UPRIGHT INSTALLATION

1. LOCATE POSITION OF END WALL UPRIGHTS - END WALLS ARE EVENLY SPACED (EXAMPLE) IF YOU HAVE A 24' BUILDING, THE END WALL COLUMNS SHOULD BE PLACED 8' CENTERED FROM THE GUTTER COLUMN. BE AWARE THAT BUILDINGS WITH LARGE DOORS OR ENTRY REQUIREMENTS MAY REQUIRE SPECIAL END WALL COLUMN SPACING. (NOTE: ENDWALL MAY HAVE MORE THAN 2 UPRIGHT COLUMNS)

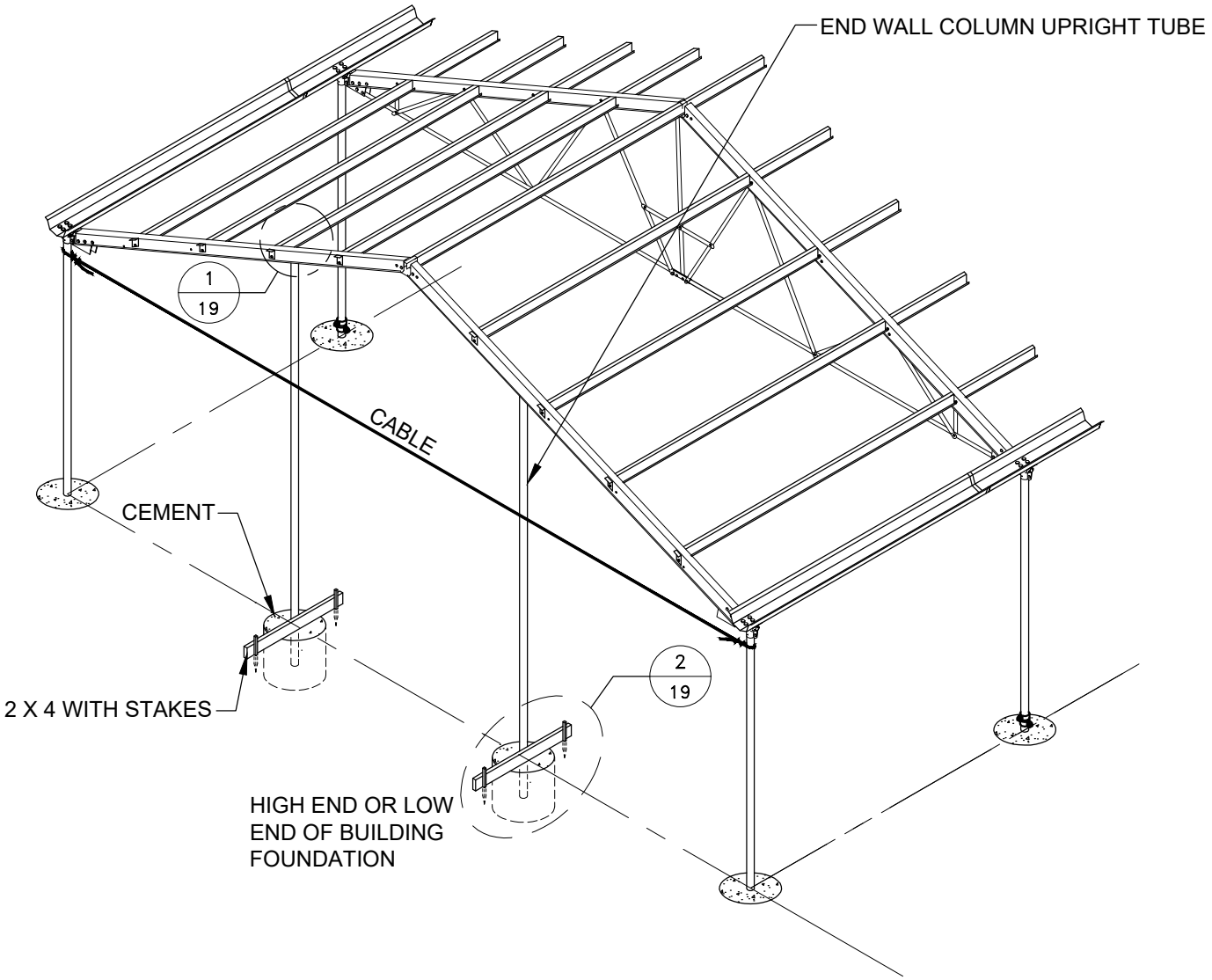

IMPORTANT

BE SURE TO ASSEMBLE END WALL COLUMN TUBES TO TOP CHORD
AS SHOWN IN DETAIL 1, PAGE 19, BEFORE POURING CEMENT.

2. BEFORE INSTALLING END WALL COLUMN TUBES, REMOVE SOIL FROM PREVIOUSLY DUG END WALL AUGER HOLES. (REFER TO PAGE 6, NOTE 4, FIGURE 7).

3. ATTACH END WALL COLUMN TUBES TO END WALL TRUSS WITH THE BRACE CLAMP TAB ASSEMBLY. USING THE SPECIFIED BOLTS TO THE COLUMN AND EITHER A 3/8" X 2 3/4" MACHINE BOLT TO TRUSS OR (2) #14 X 1 TEK SCREWS PER SIDE.

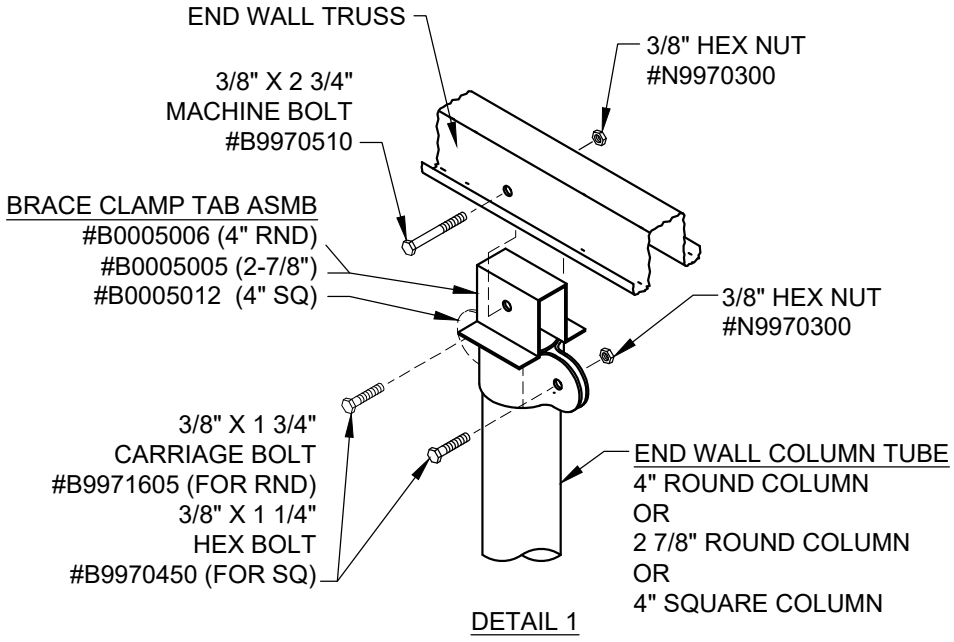

DETAIL 1

IMPORTANT

BE SURE TO ASSEMBLE END WALL COLUMN TUBES TO ARCHES BEFORE POURING CEMENT.

4. BEFORE POURING THE CEMENT, SLIP ONE (1) CLAMP TUBE LEG BRACE ON EACH END WALL COLUMN TUBE. STAKE 2 X 4'S IN PLACE KEEPING THE COLUMNS PLUMB IN BOTH DIRECTIONS AND TEMPORARILY NAIL THE CLAMP TUBE LEG BRACES TO THE 2 X 4'S (SEE DETAIL 2 BELOW). THIS IS DONE TO HELP SUPPORT THE WEIGHT OF THE BUILDING WHILE THE CEMENT IS CURING. WAIT A MINIMUM OF 24 HOURS BEFORE REMOVING 2 X 4'S.

5. SET THE 4" COLUMN IN THE FOOTING. THE COLUMNS ARE SET IN LINE WITH THE GUTTER COLUMNS.

6. ONCE THE CONCRETE HAS CURED, BUILDER MAY IF DESIRED REMOVE THE CUSTOMIZED LOWER CHORD AND MOUNTING BRACKETS FROM THE EXPOSED END WALLS. THESE ASSEMBLIES ARE PROVIDED SOLELY AS MEANS OF PREVENTING THE WEIGHT OF THE UPRIGHT COLUMNS FROM FORCING THE GUTTER COLUMNS OUT.

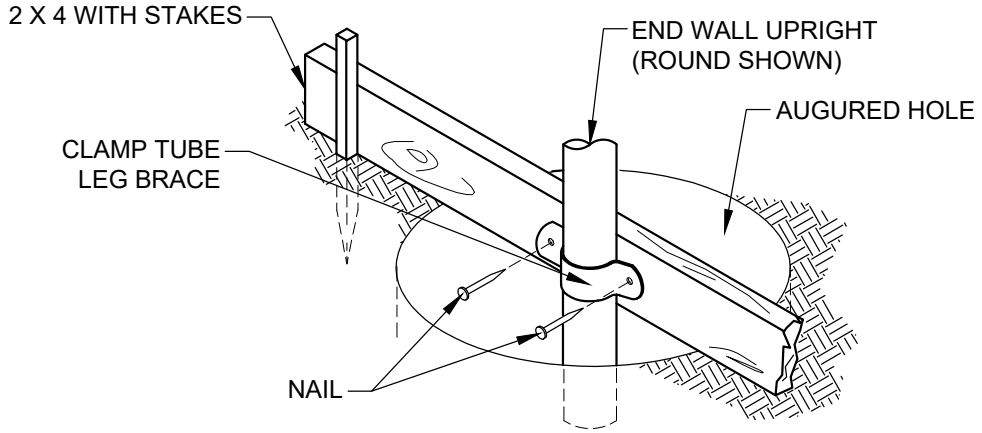

DETAIL 2

END BAY CABLE INSTALLATION

1. ATTACH 2 BRACE CABLES TO THE CHEVRON EYE BOLT ON THE NUMBER 2 TRUSS.

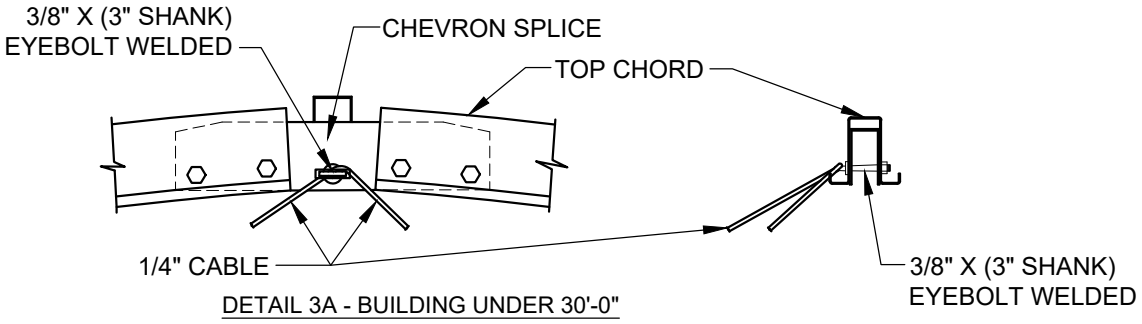

DETAIL 3A - BUILDING UNDER 30'-0"

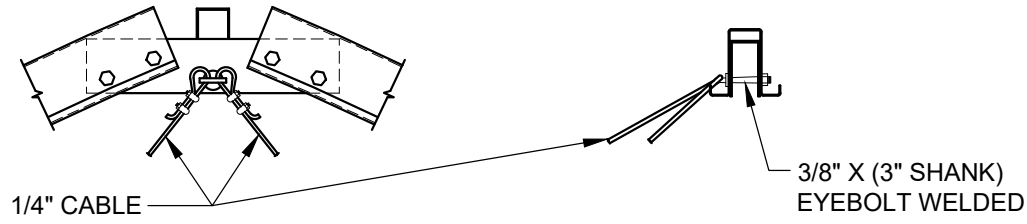

DETAIL 3B - BUILDING OVER 30'-0"

2. ATTACH THE BRACE CABLES TO THE QUARTER POINT EYE BOLTS OF THE NUMBER 2 TRUSSES.

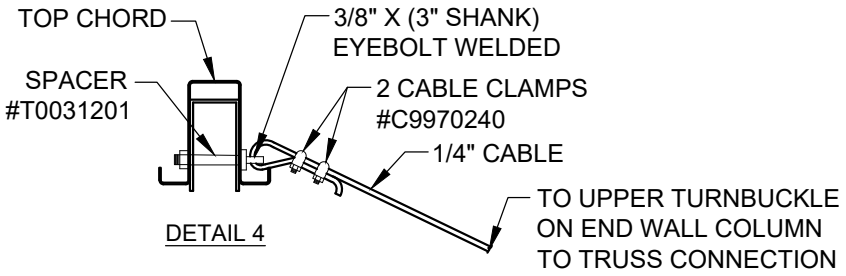

DETAIL 4

3. CONNECT THE OPPOSITE END OF THE CHEVRON BRACE CABLES TO THE LOWER TURNBUCKLE AND THE OPPOSITE END OF THE QUARTER POINT BRACE CABLES TO THE UPPER TURNBUCKLE OF THE END WALL COLUMN TO ARCH CONNECTION.

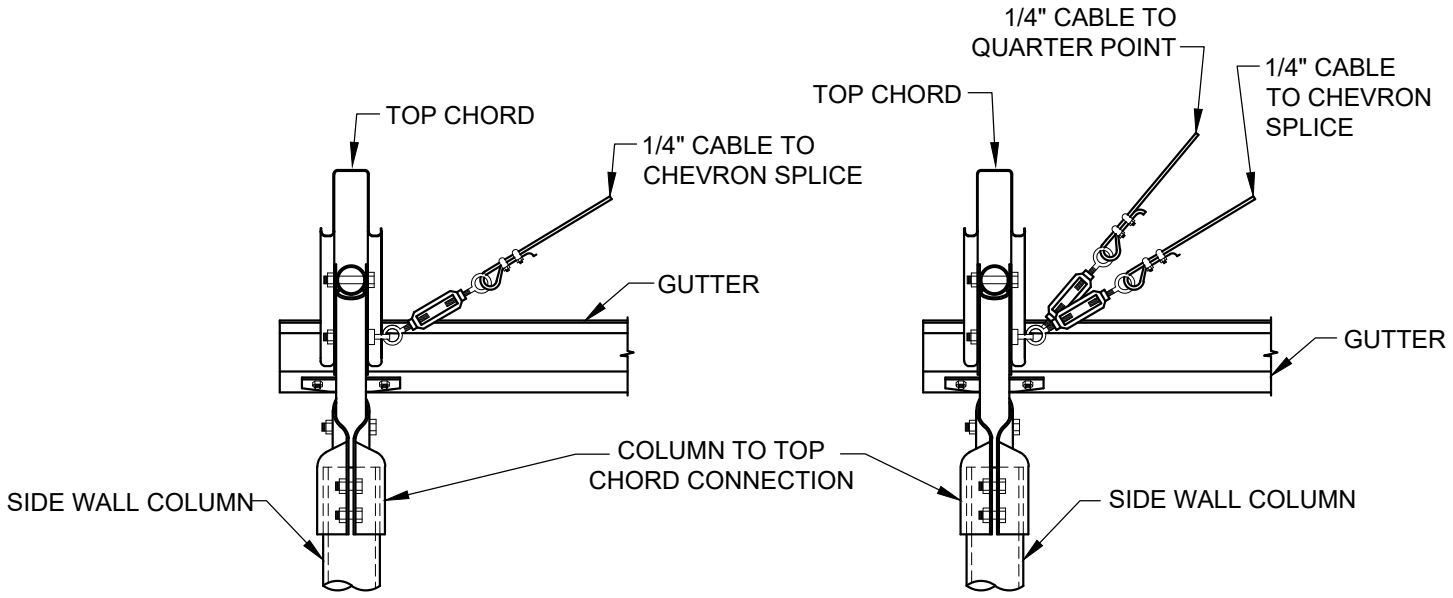

DETAIL 5A - BUILDING UNDER 30'-0"

DETAIL 5B - BUILDING OVER 30'-0"

4. MOVE THE TOP BRACE CLAMP BANDS PREVIOUSLY PLACED ON THE SECOND AND THIRD INTERIOR COLUMNS, 18" FROM THE TOP OF THE COLUMN TO THE CENTER LINE OF THE CLAMP. TEK SCREW THE CLAMP TO THE COLUMN WITH 14-14 X 1" TEK SCREW. **PLEASE NOTE**, IF YOU HAVE A SHADE SYSTEM OR A BLACKOUT SYSTEM, THEN THE 18" DIMMENSION FROM THE TOP OF COLUMN WILL **NOT** APPLY, PLACE CLAMPS JUST BELOW THE SYSTEMS, ONCE THEY ARE INSTALLED.

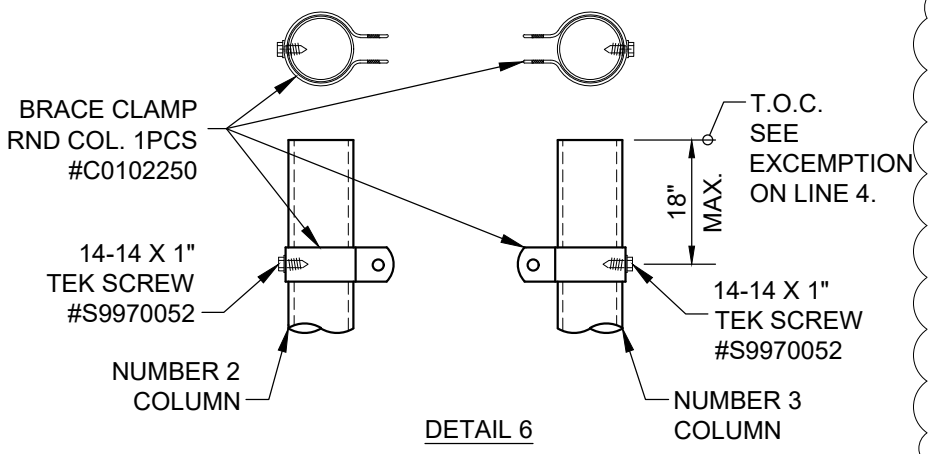

DETAIL 6

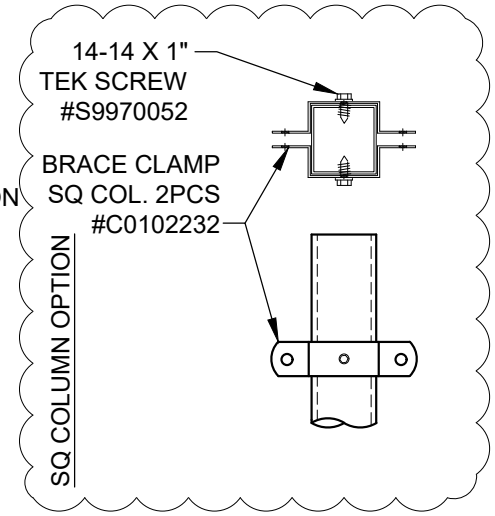

5. MOVE THE BOTTOM BRACE CLAMP BANDS PREVIOUSLY PLACED ON THE SECOND AND THIRD INTERIOR COLUMNS, 6" FROM THE TOP OF THE FOOTING TO THE CENTER OF THE BRACE CLAMP. TEK SCREW THE CLAMP TO THE COLUMN WITH 14-14 X 1" TEK SCREW.

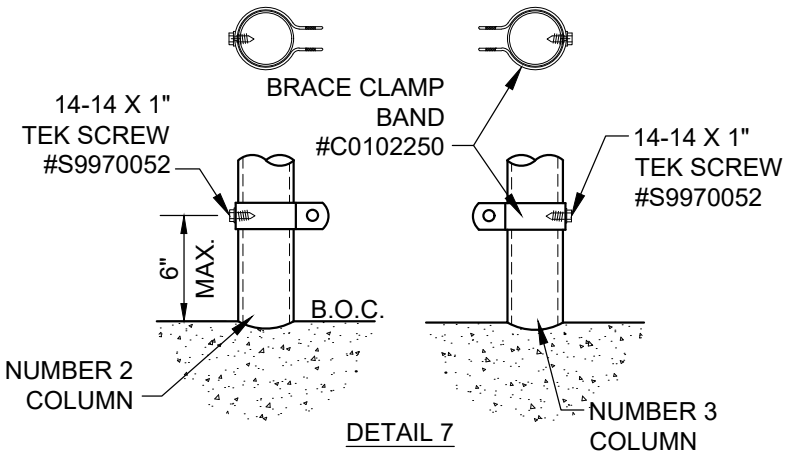

DETAIL 7

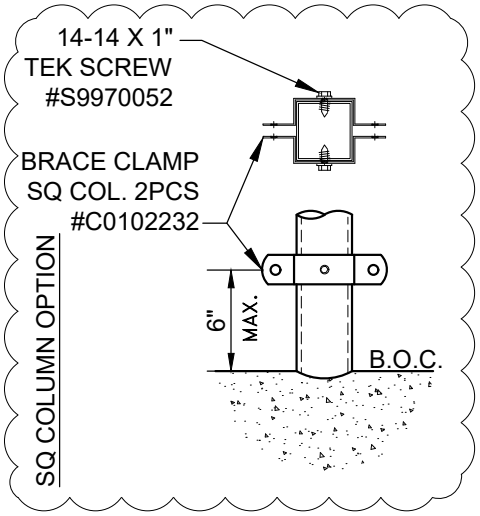

6. ATTACH TURNBUCKLES TO THE BOTTOM BRACE CLAMP BANDS WITH A 3/8" X 1 3/4" CARRIAGE BOLT AND 3/8" HEX BOLT (DO NOT TIGHTEN).

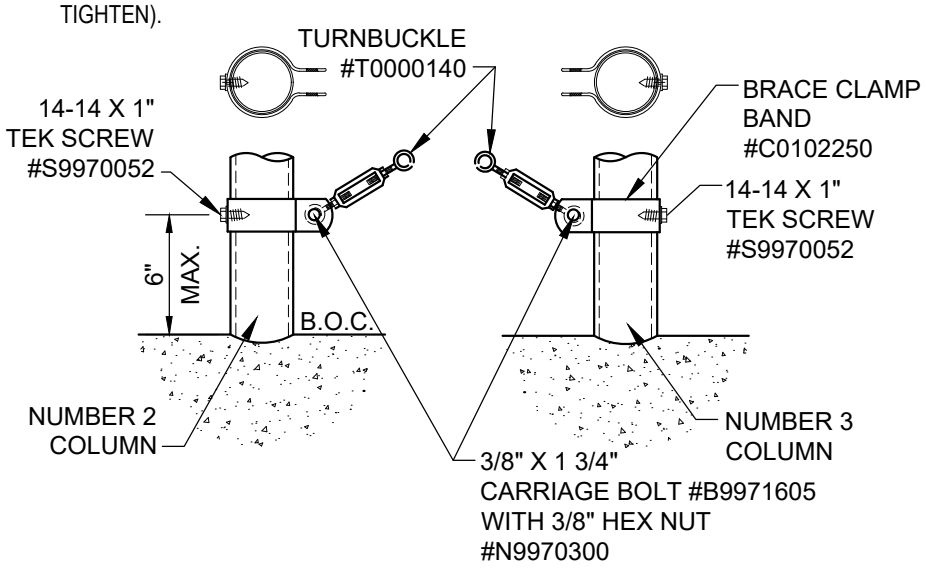

DETAIL 8

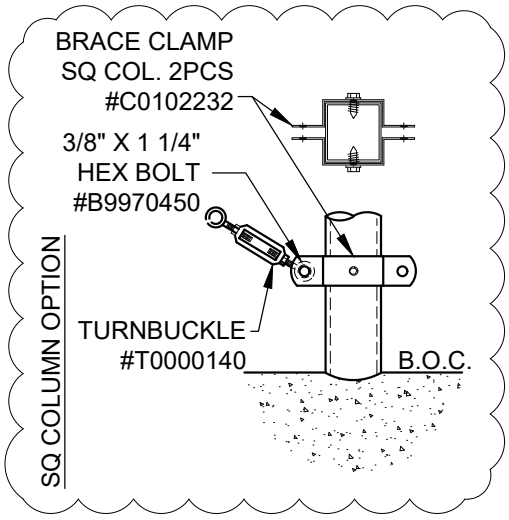

7. ATTACH THE BRACE CABLES TO THE UPPER BRACE CLAMP BANDS ON THE SECOND AND THIRD INTERIOR COLUMNS WITH 2 CABLE CLAMPS AND THE BOLTS SPECIFIED. SEE PAGE 13 NOTE 1 & 2, FOR PREVIOUS INSTRUCTIONS ON ADDING THESE CLAMPS.

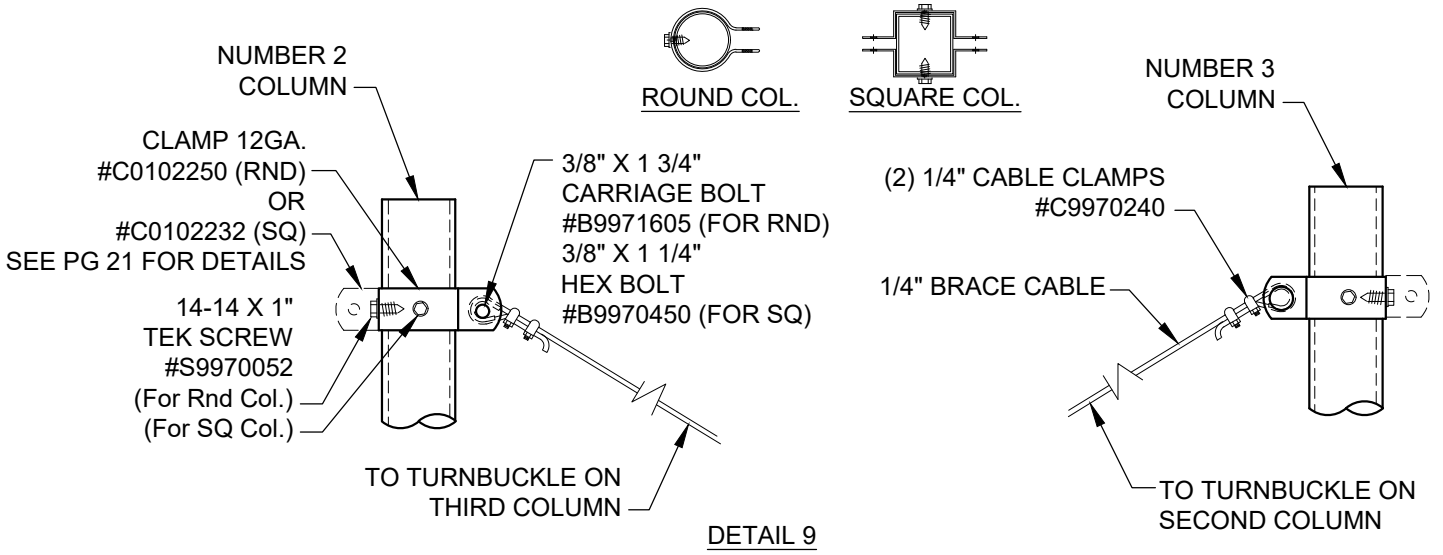

DETAIL 9

8. ATTACH THE OPPOSITE END OF THE BRACE CABLE CONNECTED TO THE SECOND COLUMN TO THE TURNBUCKLE ON THE BOTTOM BRACE CLAMP BAND ON THE THIRD COLUMN. REVERSE THE INSTRUCTIONS FROM ABOVE FOR THE SECOND CABLE, FORMING AN "X" BETWEEN THE SECOND AND THIRD INTERIOR COLUMNS.

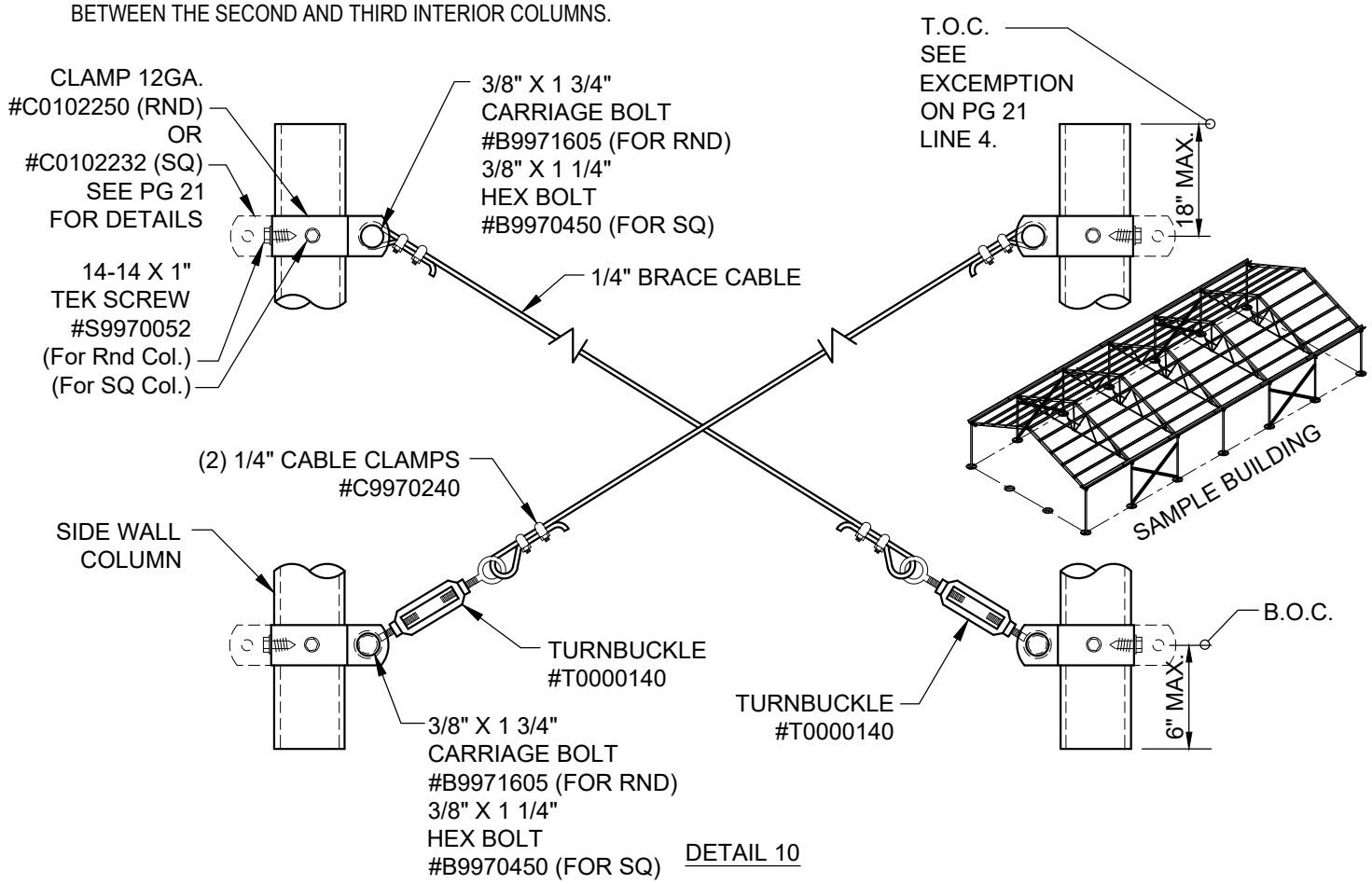

DETAIL 10

9. TIGHTEN THE TURNBUCKLES UNTIL THE BUILDING IS PLUMB. THEN TIGHTEN THE SPECIFIED BOLTS THAT CONNECT THE TURNBUCKLE TO THE CLAMP.

NOTE: SOME ENGINEERED BUILDINGS WILL REQUIRE ADDITIONAL X-BRACING LOCATIONS, PLEASE REFER TO ENGINEERING PLANS.

STRINGER CABLE INSTALLATION

1. BOLT THE CABLE CLAMP TAB TO THE END WALL COLUMNS WITH 3/8" X 1 3/4" CARRIAGE BOLTS OR WITH 3/8 X 1-1/4 HEX BOLT FOR SQUARE END WALL COLUMNS.

2. RUN THE 3/16" STRINGER CABLE AS SHOWN IN THE FIGURE BELOW, USING WGC/CONLEY'S CABLE CLAMPS (#C0050260), AT EVERY INTERFACE BETWEEN THE LOWER CHORDS AND THE 3/16" CABLE.

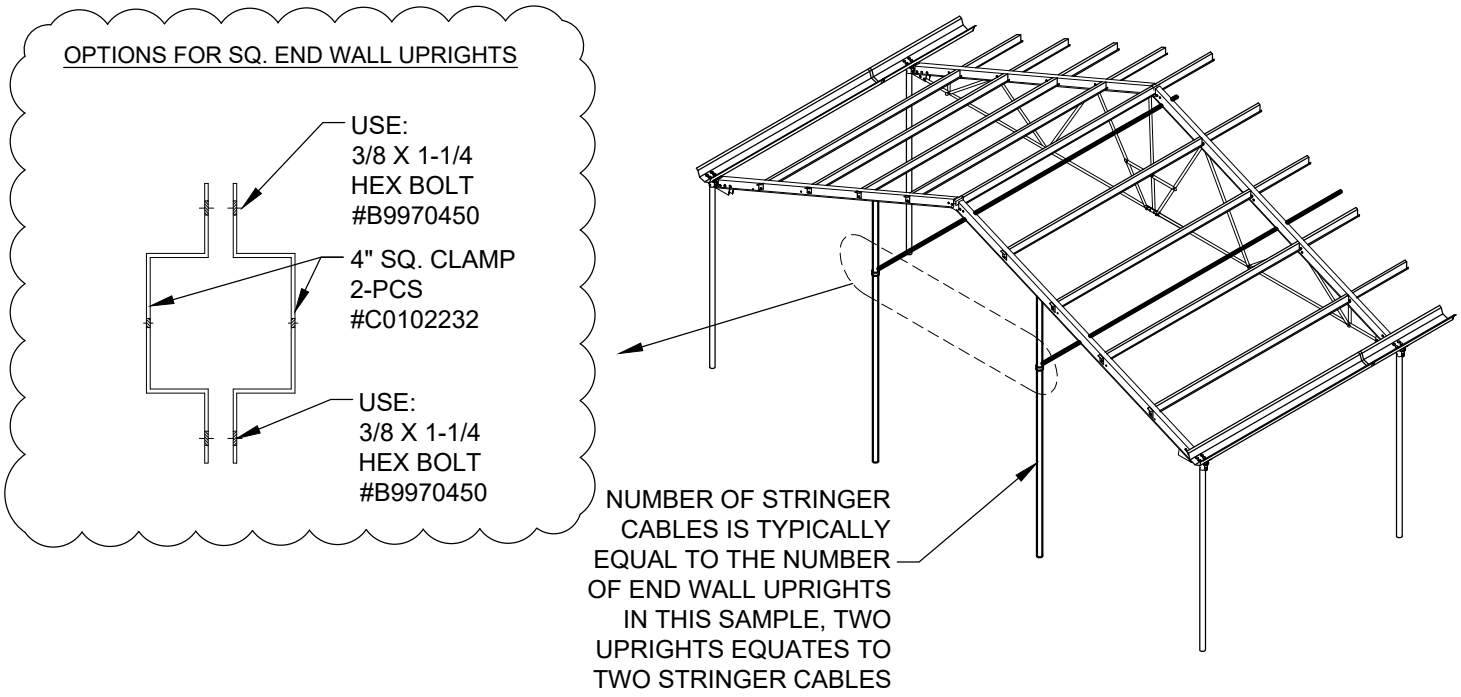

DETAIL 11 - STRINGER CABLE LAYOUT

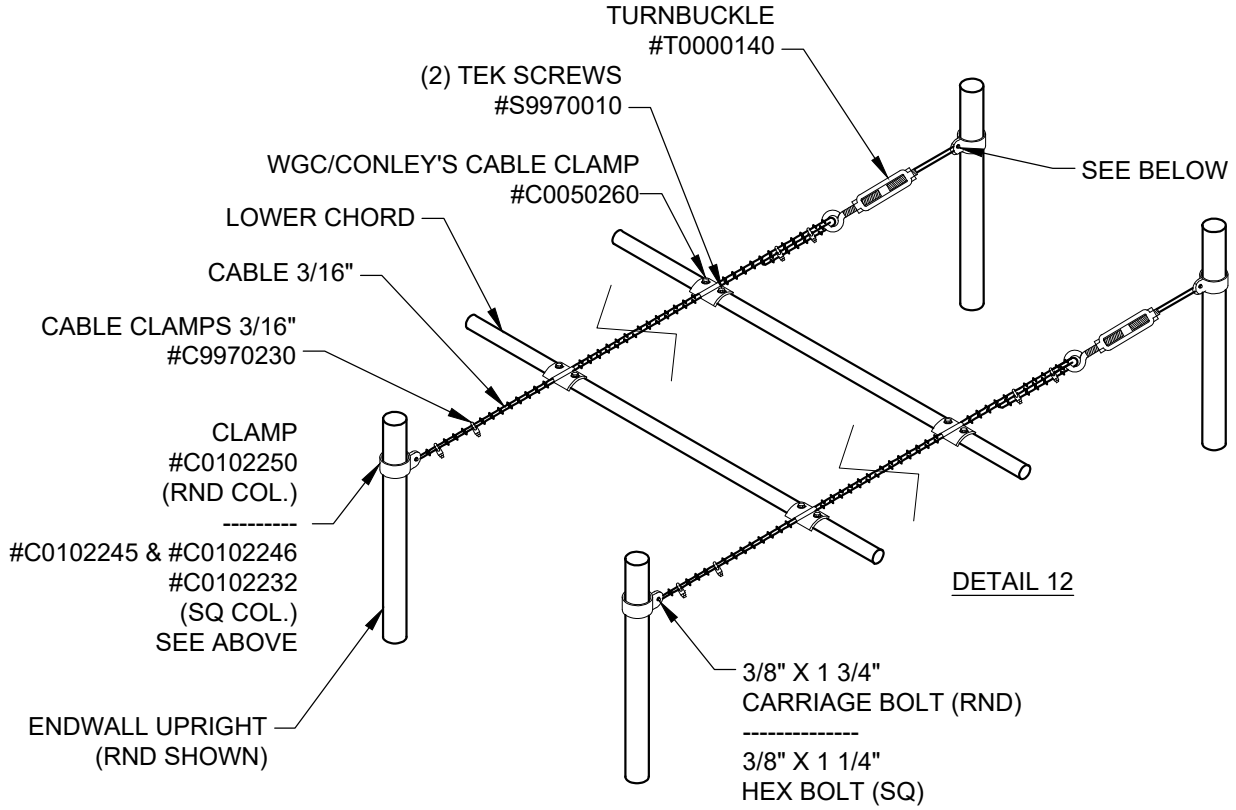

KNEE BRACE INSTALLATION (OPTIONAL DEPENDING ON LOADING)

1. ATTACH THE 1 5/8" OR 1 7/8" KNEE BRACE TO THE BRACE CLAMP WITH HEX BOLT SPECIFIED. DISCONNECT THE BOLT CONNECTING THE LAST FILLER TUBE TO THE BOTTOM CHORD.

2. SLIDE THE KNEE BRACE ASSEMBLY UP THE COLUMN AND ATTACH IT TO THE LOWER WITH FILLER TUBE. REINSTALL THE HEX BOLT AND TIGHTEN. FASTEN THE CLAMP BRACE TO THE COLUMN WITH 14-14 X 1" TEK SCREW IF APPLICABLE.

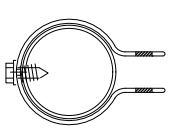

ROUND COL.

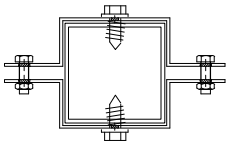

SQUARE COL.

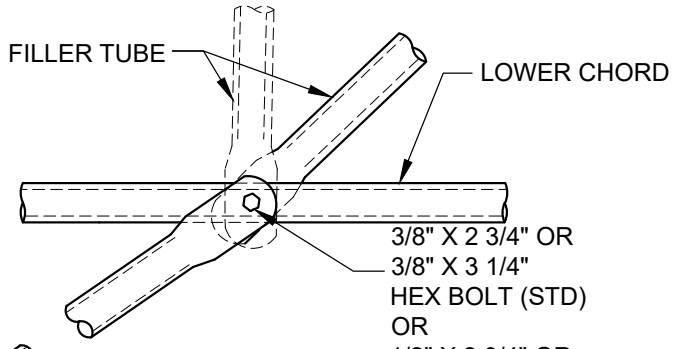

CLAMP-RND COLUMN
#C0102240 (STD RND 1PCS)
#C0102248 (ENGR RND 1PCS)

CLAMP-SQ COLUMN
#C0102230 (STD SQ 2PCS)
#C0102229 (ENGR SQ 2PCS)
TRIM UNUSED EAR
IF NECESARRY

14-14 X 1"
TEK SCREW
#S9970052
(For Rnd Col.)
(For SQ Col.)

COLUMN

1 5/8" KNEE BRACE
OR
1 7/8" KNEE BRACE

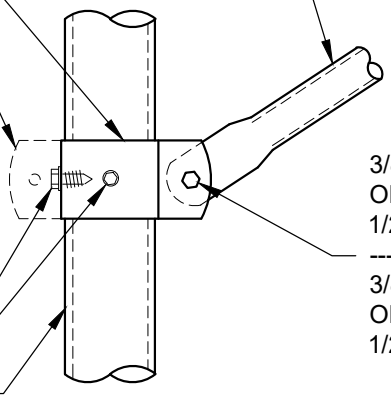

3/8" X 1 3/4" CARR. BOLT (RND STD) #B9971605
OR
1/2" X 1 3/4" HEX BOLT (RND ENGR) #B9970810

3/8" X 1 1/4" HEX BOLT (SQ STD) #B9970450
OR
1/2" X 1 1/4" HEX BOLT (SQ ENGR) #B9970790

EXTERIOR COLUMN

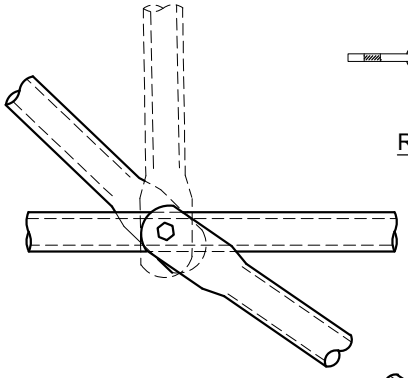

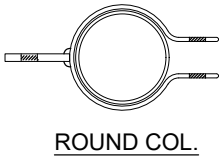

ROUND COL.

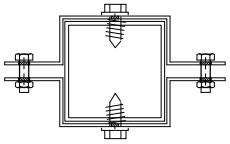

SQUARE COL.

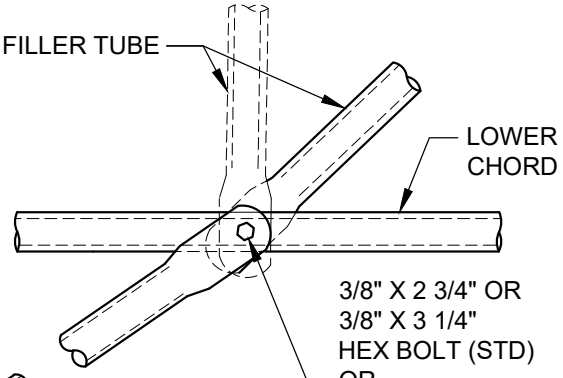

1 5/8" KNEE BRACE
OR
1 7/8" KNEE BRACE

3/8" X 2 3/4" OR
3/8" X 3 1/4"
HEX BOLT (STD)
OR
1/2" X 2 3/4" OR
1/2" X 3 1/4"
HEX BOLT (ENGR)

3/8" X 1-1/4" HEX BOLT (STD)
#B9970450
OR
1/2" X 1-1/4" HEX BOLT (ENGR)
#B9970790

CLAMP ASMB INT. LEG
#C0102297 (STD RND 1PCS)
#C0102298 (ENGR RND 1PCS)
#C0102230 (STD SQ 2PCS)
#C0102229 (ENGR SQ 2PCS)

COLUMN

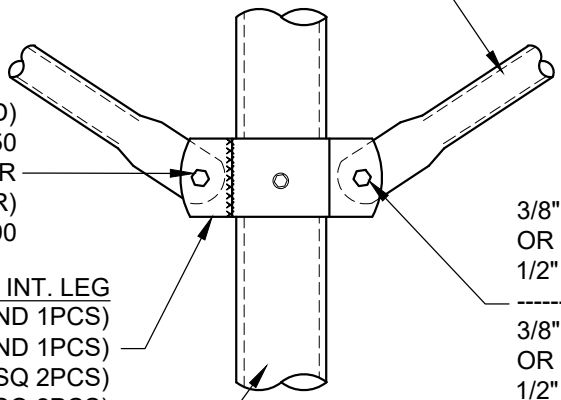

3/8" X 1 3/4" CARR. BOLT (RND STD) #B9971605
OR
1/2" X 1 3/4" HEX BOLT (RND ENGR) #B9970810

3/8" X 1 1/4" HEX BOLT (SQ STD) #B9970450
OR
1/2" X 1 1/4" HEX BOLT (SQ ENGR) #B9970790

INTERIOR COLUMN





WISCONSIN GREENHOUSE COMPANY
608.284.7336 • 2190 Pennsylvania Ave • Madison, WI 53704
info@wisconsingreenhousecompany.com
wgccommercial.com | wisconsingreenhousecompany.com